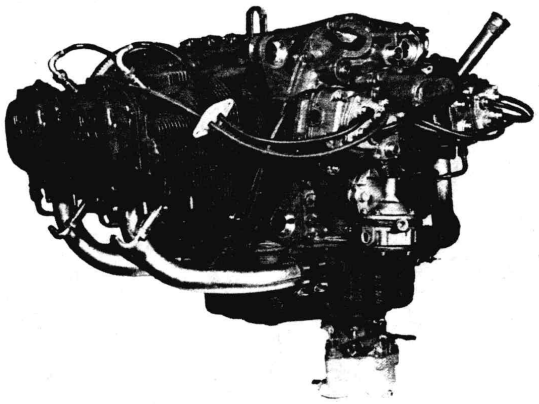

VARIEZE
MANUFACTURING MANUAL
SECTION IIC - LYCOMING 0-235 ENGINE

SECOND EDITION

Be aware that these plans may be obsolete unless updated by "The Canard Pusher," issue 19 through current.

This book
or any part thereof
must not be reproduced
in any form without written
permission of the publisher.

Published by
RUTAN AIRCRAFT FACTORY
Building 13, Airport
Mojave, California 93501
January 1979

INTRODUCTION

Section IIC of the VariEze manufacturing manual provides engineering documentation for the installation of the Lycoming O-235C model aircraft engine in the stripped configuration, e.g. no starter, alternator, etc. The Lycoming O-235 also has high compression engine models which use 100LL octane fuel (models L, J & K,etc.), but these are their newest production engines used in the new Grumman American Tr-2's and Cessna 152's. Their availability is quite low at present and not only are they quite expensive but they have too much power (125 Horsepower) for the VariEze. Take-off would have to be done with reduced power. The O-235 is absolutely the largest engine of the Lycoming engines which can be used for your VariEze. Use of the Lycoming entails advantages and disadvantages which we will discuss briefly.

Advantages in using the Lycoming O-235 are 1) better fuel consumption at cruise power settings, 2) higher horsepower available, and 3) longer life between overhauls. The disadvantage in using the Lycoming O-235 is mainly in its weight. As stated above, the O-235 is absolutely the largest engine which can be used in the VariEze. It is 12 pounds heavier than its nearest counterpart from Continental-the O-200. Because of its heavier weight it would be unacceptable for those who believe they must have an alternator/generator system or an electrical starter. Pilots who weigh under 170 pounds will find that they probably have to add ballast in the form of a battery and/or lead to the mose of the aircraft in order to bring c.g. within range. It should be noted that the c.g. range can be moved aft one inch by shortening the canard tips four inches from each side.

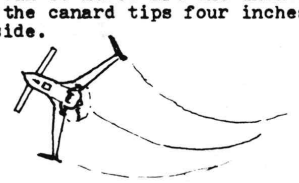

The installation methods and configurations shown in this section have been carefully developed to provide the builder with a simple and reliable engine installation. Builder-initiated modifications are not recommended. The individual who does initiate his own installation or systems modification must consider himself (or herself) to be in the developmental engineering business and be prepared to assume the significant risks and precautions that go with it. In the same respect, RAF does not encourage the use of engine or installation components which would not be considered fit for service in certificated aircraft. Specifically, engine service standards as defined by Avco Lycoming's service manuals and bulletins should be complied with. Any Lycoming O-235 engine or component that isn't suitable for a Piper Colt, Grumman American Tr-2,etc., is probably unfit for service in your VariEze. This philosophy applies to the use of non-approved accessories such as carburetors, turbo-chargers, etc.

Each builder should complete the education he has begun in building his own aircraft by becoming knowledgeable about the engine he buys, flies and maintains. You can save yourself some big bucks, not to mention grief, by learning about your engine before you buy it. Very complete and informative maintenance and overhaul manuals are available at low cost (under $10) from Aircraft Spruce and Specialties , and many other aviation supply houses. Buy a copy of the manual covering your engine and study it closely - you depend on your engine.

The small Continentals and O-235 Lycoming comprise the largest number of available powerplants suitable for use in the VariEze.Unfortunately these engines are the most common selection for other types of amateur-built aircraft and they are in regular demand for use in antique restoration projects. The popularity of the small Lycoming O-235 has had the detrimental effects of encouraging a few black-hearted thieves to sell uninformed and trusting individuals engines which have had only "spray can" overhauls as OSMOH engines. Let the buyer beware. If you don't wish to become knowledgeable enough to avoid these shysters yourself, hire a trusted A & P or AI-rated mechanic to be knowledgeable for you, before you buy.

Configuration

The general configuration of the engine installation described here is conventional with few exceptions. The noteworthy exceptions are the use of updraft cooling, small diameter fixed-pitch wood propellor, and the recommended use of the O-235 model as a pusher. The VariEze utilizes updraft (from bottom to top) cooling for a variety of reasons: first, the accessories (mags, alternator, etc.) are on the cold air side, prolonging their service life; second, the engine "hot spots" (exhaust ports, oil sump, etc.) are cooled first and most efficiently; third, the best cooling air pressure gradient available is from below the wing to the prop. All of these features combine for a simple and effective cooling system. A fixed-pitch wood propellor was selected first for fatigue-free service not possible with metal props, second, for minimum weight, and third for simplicity and low cost. The efficiency of a well designed modern, two-blade, wood prop is essentially equal to the best metal props at half to one-third the weight. The performance compromise in using fixed pitch instead of variable pitch/constant speed (adjustable) does not limit the airplane's utility at all. The weight and complexity penalty in using constant-speed/variable-pitch propellors is totally unthinkable for the VariEze. The vibration characteristics of a pusher prop might compromise the service life or even basic flight safety of an adjustable propellor. With the tip speeds used, multi-bladed props have no performance improvements to offer, only weight and cost penalties.

The Engine

As you become knowledgeable about the Lycoming 0-235 engine, you will soon discover that there are some model variations. The commonality in all of these models, dash numbers, etc., that makes it possible to cover their installations in one manual is this: they all may use the same engine mount; they are all dimensionally similar;* the cooling characteristics are similar; the cowling fits them all; the exhaust system fits them all; and the details of wiring and accessories are nearly identical. The minor dimensional differences between the various models require no major modification of the system proven by service test in the prototype.

In every way possible the engine installation has been kept as simple and light as possible. Electric starters ** available on the 0-235 models are not recommended in this installation because they offer very little in added convenience or safety and give you another heavy (40 pounds) system to buy and maintain. See section IV (owner's manual) for a complete operational description of the manual-starting technique. As you install your own engine, try to resist the temptation of gadgetry; keep it simple - keep it light.

Engine and Accessory Weights

In spite of our best efforts to convince you to keep your airplanes simple, a few of you are die-hard gadgeteers and will insist on loading your engines up with starters, generators, alternators and all sorts of non-essential equipment. One of you, at least, will push the engine installation weight to the absolute limit no matter what the consequences are. We want you to know in advance what the absolute weight limit of the installation (this includes everything, not just the engine!) is, and why. The absolute maximum weight of the total installation, including engine, accessories, mount, prop extension, prop, mounting hardware, baffling, engine oil, and inlet flange is 240 pounds. This limit means that your engine, complete with accessories, can't weigh over 215 pounds. Exceeding the 215 lb. engine limit will jeopardize the structural design of the airframe. To help you all stay within bounds a tabulation of engine and accessory weights is provided. This data is taken directly from the FAA type certificate data sheets for these engines.

0-235 ENGINE	BASIC DRY WEIGHT (mags & carb only)		ALTERNATOR & SHIELDED IGNITION	WITH STARTER
C1 C2A	208		**223	**243
C1B	207		**222	**242
C2B C2C	209		**224	**244
C1C	204		**219	**239

**These configurations are unacceptably heavy.

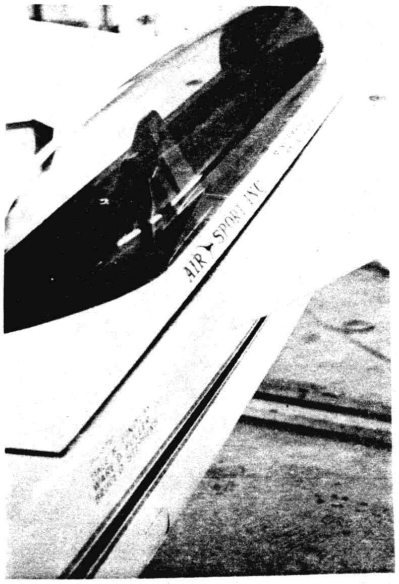

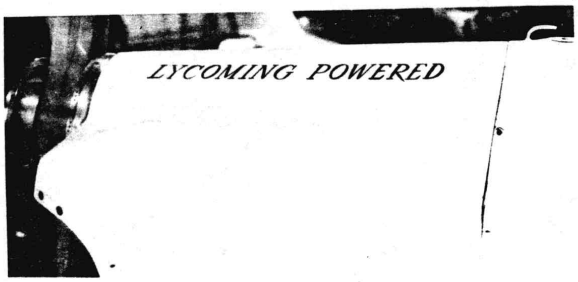

* THE 0-235 ENGINES DESCRIBED ARE LOW COMPRESSION ENGINES WHICH USE A CONICAL ENGINE MOUNT. HIGH COMPRESSION 0-235 (MODELS F, J, K, L) USE A DYNA-FOCAL AND ARE NOT DESCRIBED HEREIN.

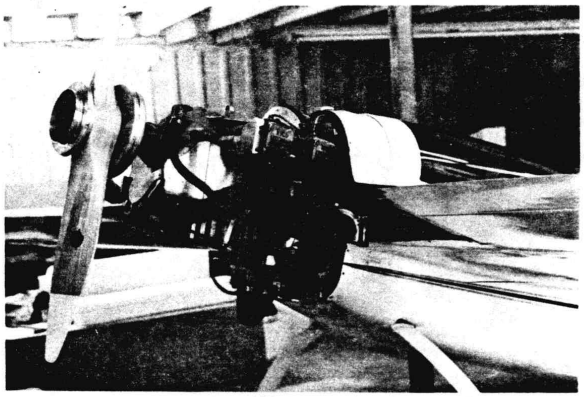

** ELECTRIC STARTER ARE STRICTLY VERBOTEN.

Step 1

Installing the Throttle Quadrant

The throttle quadrant shown is an off-the-shelf unit developed by Ken Brock Mfg.

Referring to the sketches shown here and page A-1 of section I, locate and mount the throttle quadrant to the instrument panel.

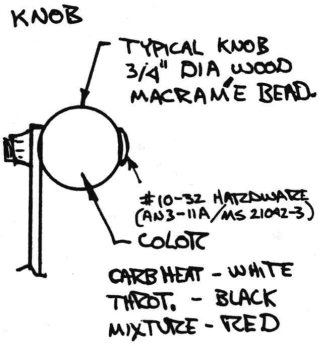

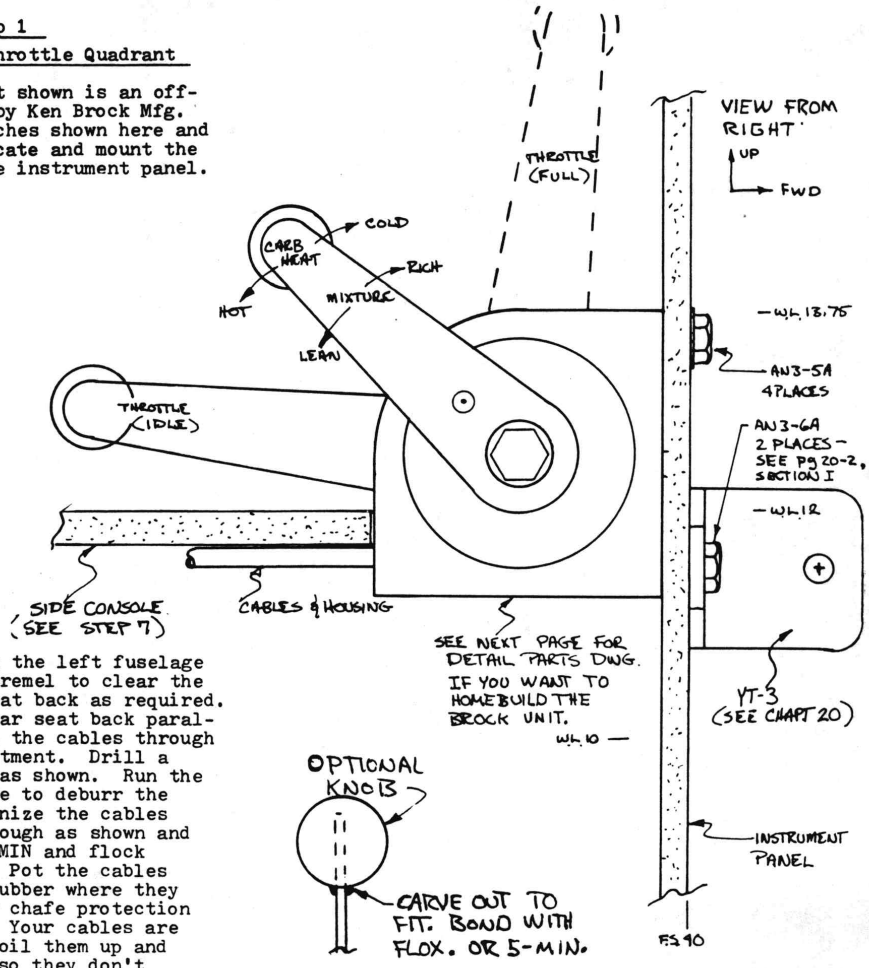

Route the cables aft along the left fuselage side as shown. Use your dremel to clear the trough around the front seat back as required. Bore a 1/2" hole in the rear seat back parallel to the trough and feed the cables through it into the baggage compartment. Drill a 1/2" hole in the firewall as shown. Run the cables through it. Be sure to deburr the stainless edgeswell. Organize the cables into the fuselage side trough as shown and bond it in with ablob of 5MIN and flock every eight inches or so. Pot the cables generously with silicone rubber where they penetrate the firewall for chafe protection and to seal the firewall. Your cables are overly long still; just coil them up and tape them to the firewall so they don't get damaged. DON'T BEND THEM SHARPLY.

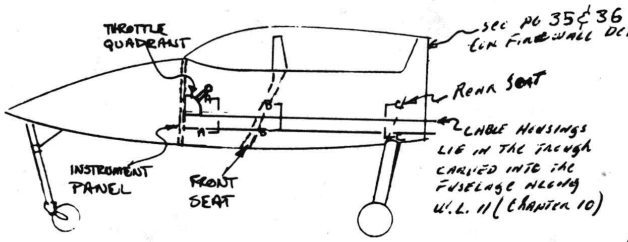

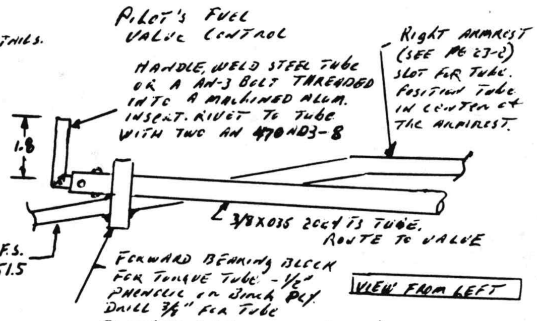

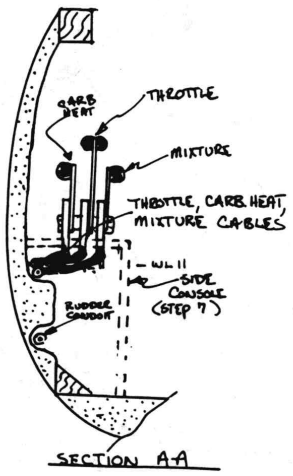

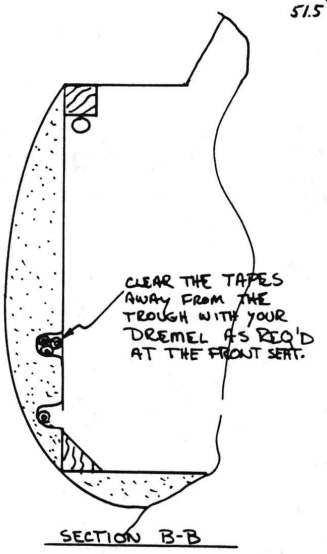

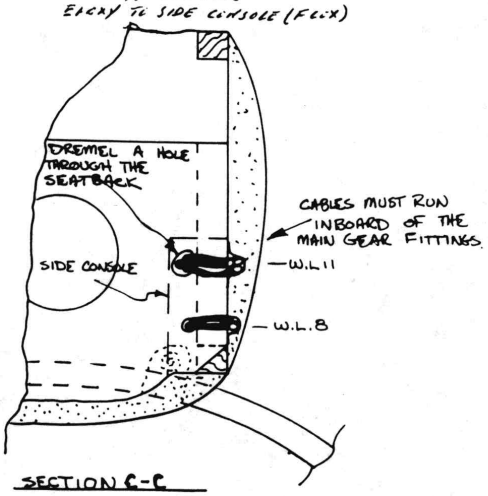

THROTTLE DETAILS

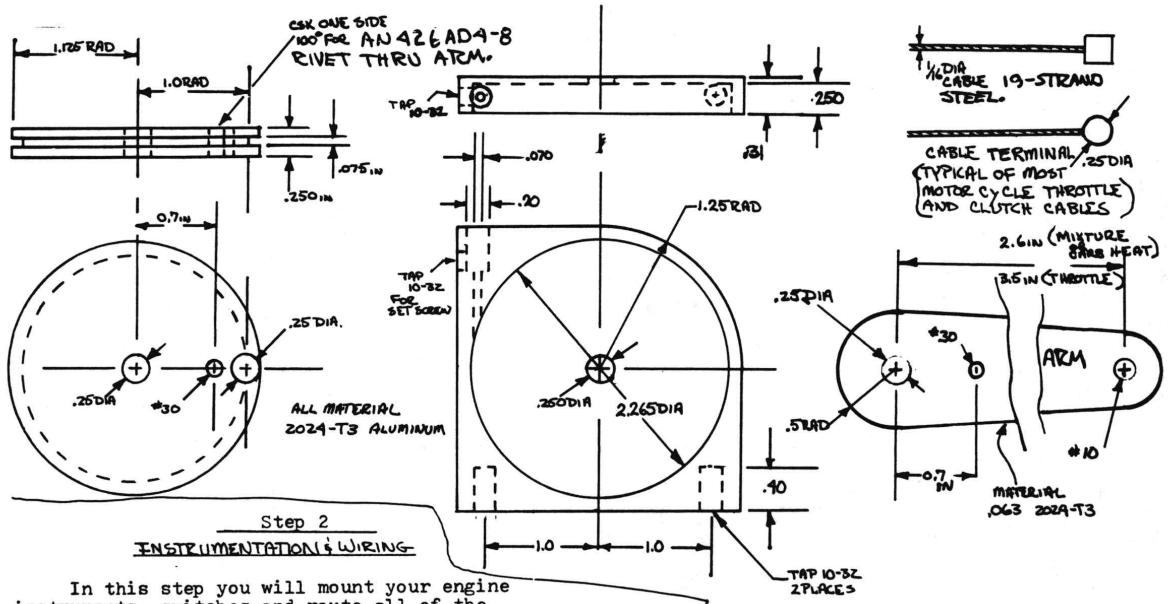

Step 2

INSTRUMENTATION & WIRING

In this step you will mount your engine instruments, switches, and route all of the associated equipment to the firewall. Direct-reading instrumentation or magneto-powered instrumentation is recomended since the basic VariEze will not have an electrical system. Electrical instrumentation may be substituted (section III) by those builders installing electrical systems. All of the instrumentation called for in this step is available through a VariEze Distributor.

First, mount your instruments (Tachometer, Cylinder Head Temp, Exhaust Gas Temp, Oil Temp, Oil Pressure) on the instrument panel. Direct reading instruments must have lines at least 10 ft. long . Mechanical tachometers are not really practical due to the long cable required. A magneto-powered electric tach as shown is recommended. Mount your magneto switches in the areas shown on page A-1. (SECT I) Good miniature switches for the magneto are Micro 8A1011 or Alco MTF-106N. The standard key-type off-left-right-both switch is fine for those desiring a key-type switch.

With all of these mounted, take your dremel and clear the trough in the fuselage right side (W.L.12) through the front seat back and grind a 1/2"-dia hole through the rear seat back to allow the instrumentation into the baggage compartment like you did in step one. Drill a 1/2"-dia hole through the firewall at approximately B.L.6.5 right and W.L.12.0 (below and inboard of your lower-right engine mount extrusion). Be sure to deburr and smooth the stainless steel edges so they won't chafe your wiring. Push your instrumentation wiring, oil pressure tubing, and oil temperature lines through both seat bulkheads and the firewall. Locate the instrumentation bundle down in the groove in the fuselage side and be sure that it doesn't interfere with the rudder cable in the baggage compartment. Be very careful not to kink or pinch the oil temperature or oil pressure lines while routing them through the fuselage.

With all of the instrumentation and any additional wiring in place, mix a batch of 5MIN and flock, and bond the instrumentation/wiring to the fuselage with a blob every 8 inches or so. Pot the bundle amply with silicone rubber caulk where it passes through the firewall to serve as a chafe barrier and to seal the firewall. Coil the excess length of the bundle and tape it to the firewall so it doesn't get damaged. Attach the oil pressure tube to the instrument and solder the magneto wiring, ground wire, and other instrumentation wiring in place. Be sure to use good quality solder intended for electronics work.

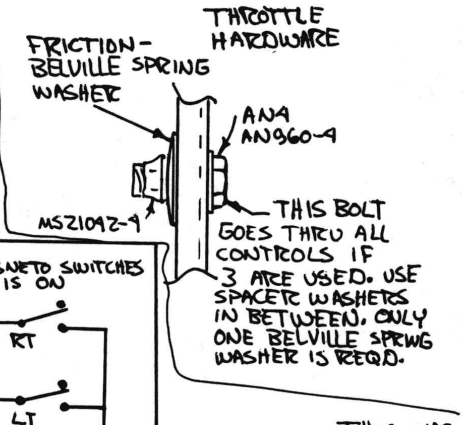

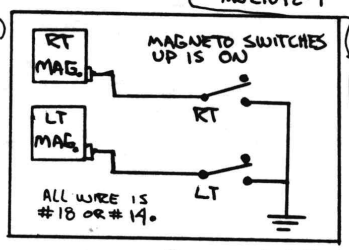

THIS one is preferre

Recommended Instrumentation

OIL PRESSURE Direct reading 0-100PSI automotive type with 14 ft of 1/8 in dia tubing (copper). (any auto parts store has these) OR WESTACH #287AM with #387-2S (mag power) OR WESTACH#287A8 with #387-2S (12 volt System)
OIL TEMP Direct reading guage with 144inch capilary line 100°- 250° F OR WESTACH #299A2M with #399S sender (mag power) OR WESTACH #299A2 with #399S sender (12volt System)
TACHOMETER WESTACH #232AM TACH and #103-18 adapter (mag pwr) OR WESTACH #232A TACH for 12volt system
CYLINDER HEAD TEMP WESTACH #270A6P CHT guage &#712-5W probe
EXHAUST GAS TEMP WESTACH #270A9 EGT guage & #712-2DW probe

USE THE WIRING DIAGRAMS PROVIDED WITH EACH INSTRUMENT.

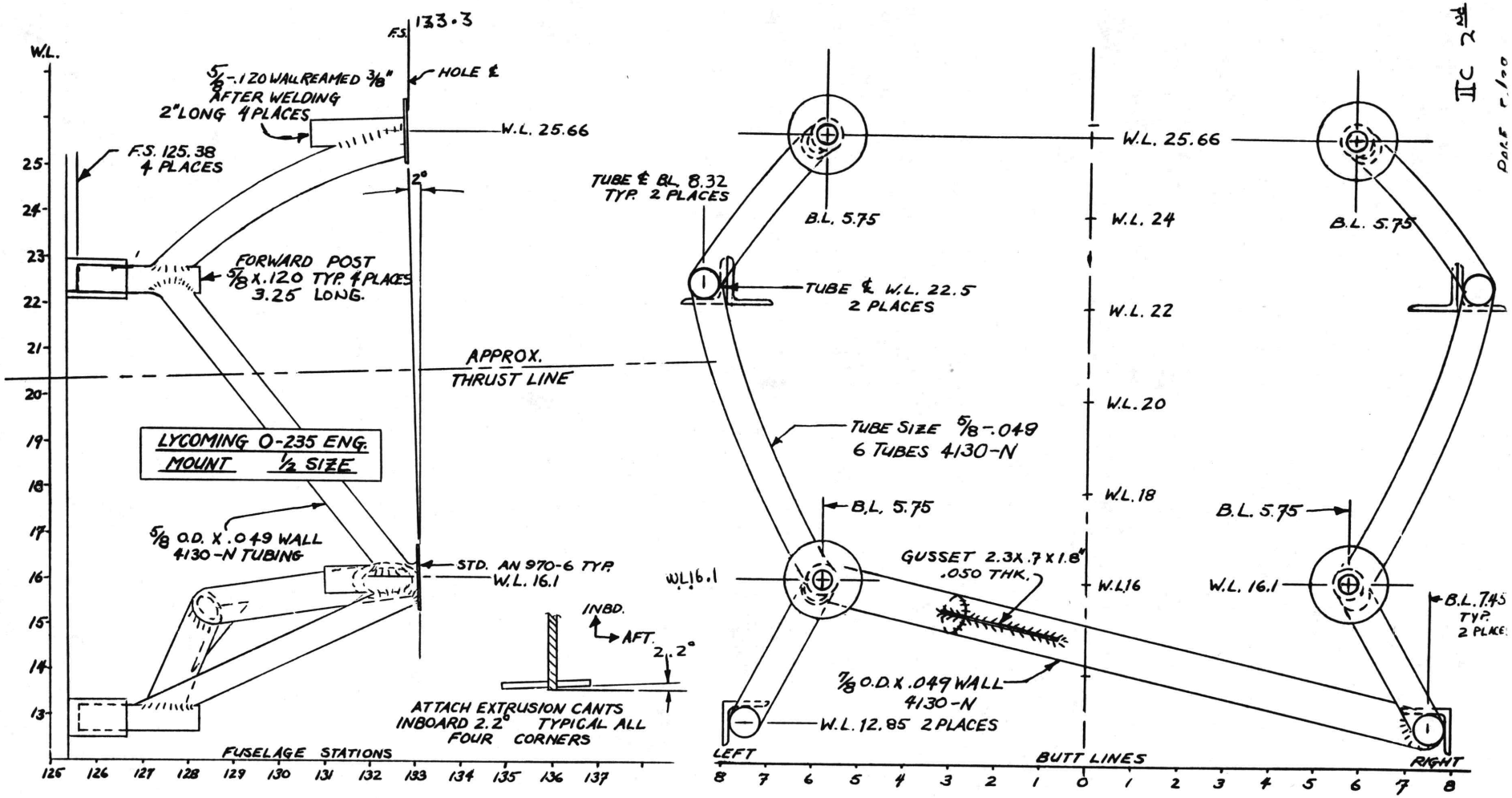

B. SEIBERT

IC 2nd

STEP 3
INSTALLING THE ENGINE MOUNT

The welded engine mount assembly is available ready to install from Air Sport, Inc.,or you can fabricate your own using the information on page 5.

First remove the 1/4 inch bolts and the brake actuating arms from the upper extrusions on the firewall (you installed these in section 1, chapter 16). Be carefull not to loose the washers or VEB1 bushings. Then cut two pieces of aluminum extrusion 7/8x7/8 x .125" to lengths of 1.6". 5-min. or flox the two additional pieces to the outside of the existing top extrusions so as to form an upside down "T". Next push the mount into position as shown on page 35 & 36. You will have to spring the mount inward slightly to get it started because of the slight (2 degree) inward cant of the extrusions at the firewall. Space the ends of the mount aft of the firewall about .03" by using scraps of sheet metal between the firewall and the mount tubes. Clampthe tubes firmly and drill the eight mounting holes as shown. Use a long drill bit to drill the horizontal holes from the side since there isn't enough clearance from the firewall to use a standard drill bit. Use the holes already in the top extrusions as a guide to drillthrough. Install AN4-13A bolts onthe two lower vertical mounts which bolt through the brake master cylinder mounting angles, use AN4-16A bolts on the two upper mounts which attach brake actuating arms; the other four mount points use AN4-12A or AN4-13A. Use MS21042-4 nuts throughout and AN960-416 washers as necessary.

Install the brake actuating arms on the inboard side of the extrusions.

Once you have installed the mount be carefull of the upper mount legs; they are unsupported until the engine is installed, so dont lift the airplane with them or rest the airplane on them.

TOP FIREWALL ENGINE MOUNT (2 PLACES)
LEFT SHOWN, RIGHT IS OPPOSITE

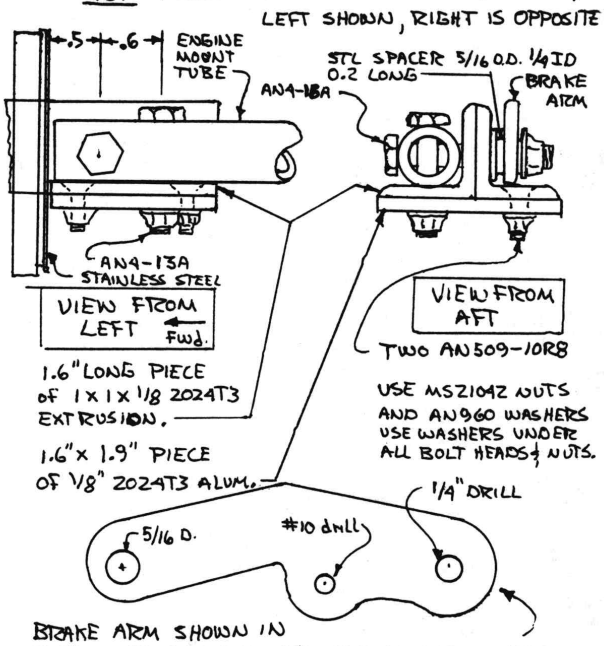

BRAKE ARM SHOWN IN SECTION I, PG 16-2 - REMAKE AS SHOWN HERE, FULL SIZE, MAKE TWO, 2024T3 1/8" THICK

BOTTOM FIREWALL ENGINE MOUNT (2 PLACES).
LEFT SHOWN

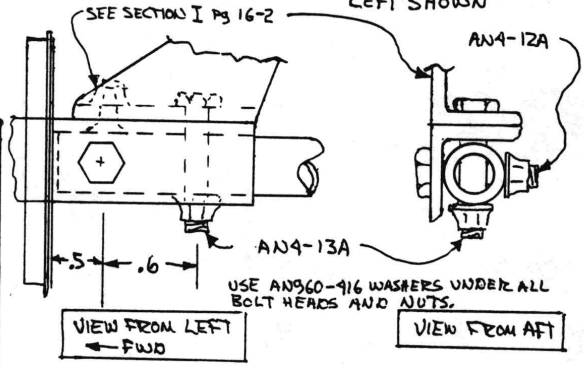

STEP 4

FUEL SYSTEM

The fuel system consists of two wing tanks and a small fuselage tank, all equipped with visual sight gauges. A three-way selector is located on the pilot's right console. The selector is positioned left to select wing fuel, up to select fuselage fuel, and right to off.

The wings hold about twenty-four gallons total, all is usable for climb or level flight. One to two gallons per tank are not usable for steep descents. The fuselage tank holds about 2.8 gallons, all is usable in all normal attitudes.

Drains are provided at the wing tanks and at the gascolator. The wing tanks are vented together to maintain equal tank fuel levels. The fuselage tank has a separate vent to provide redundancy from a clogged vent. The fuel selector handle is designed to interfere with the pilot's wrist when the fuselage tank is selected, as a reminder to not takeoff on fuselage fuel. Fuselage fuel is only used as the last fuel on a long trip. This allows complete use of the wing fuel and a very accurate indication of the last 1/2-hour fuel supply.

Do not delete the fuselage tank. Without it, the unusable fuel for descents of about three gallons becomes just "dead weight." Thus, by adding the 2.5 gallons, you are adding about 5.5 gallons of usable fuel (over 150 miles range) and providing very accurate gauging of the last 2.5 gallons. Note that all the wing fuel can be used in level flight. It is not unusual to completely run the wings out during cruise, select fuselage to restart and continue,on fuselage fuel. See "Owner's Manual" (2nd edition) for operation of the fuel system.

The schematic shown below shows the general arrangement of the entire fuel system. Details of each area are covered in other parts of this manual.

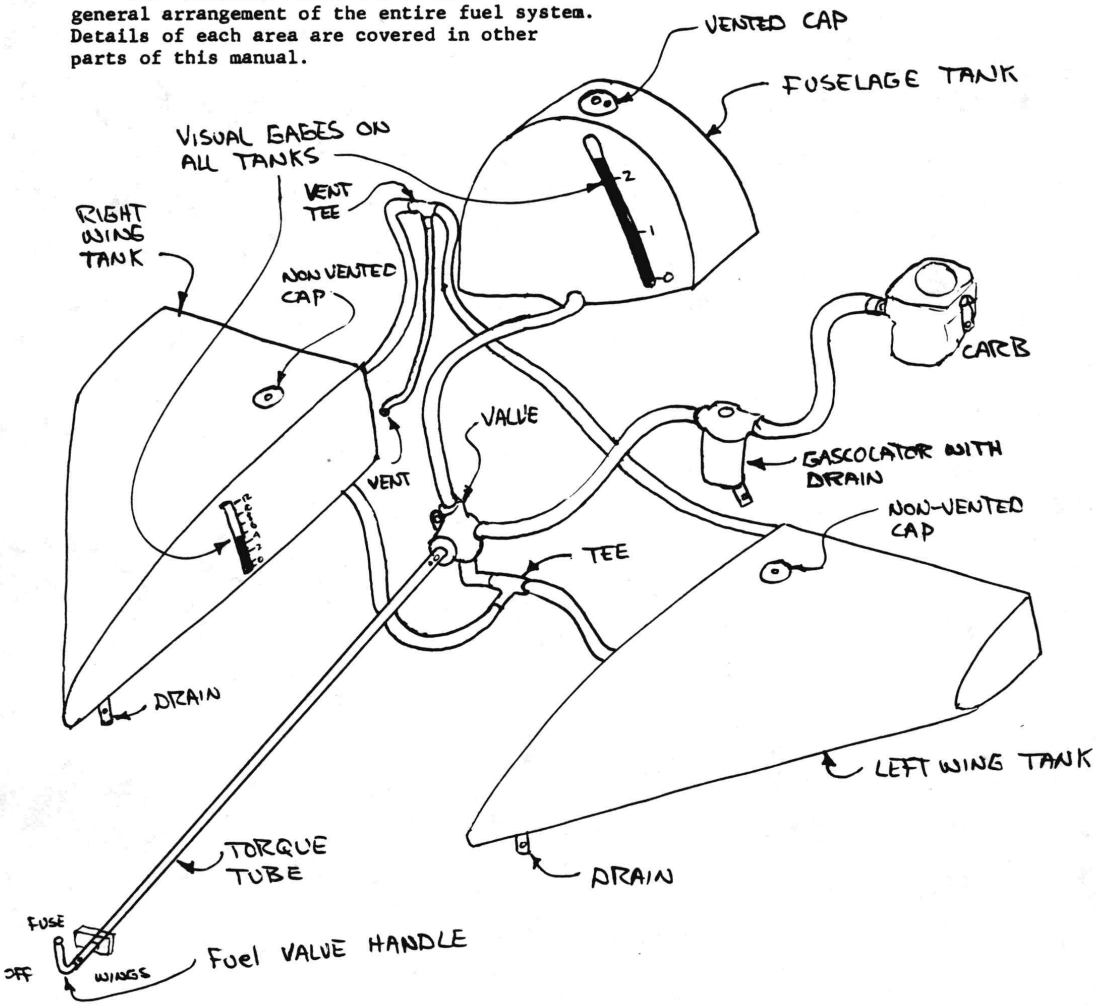

MAIN WING FUEL VENT PLUMBING

The main wing tanks are vented to a "tee" mounted high on the back of the firewall and routed to a vent ram tube under the right wing. This is required to maintain even fuel levels, to prevent fuel spillage in climbs and to provide maximum fuel pressure. Refer to the sketches, use the proper materials and route to clear rudder and aileron controls.

First drill a 3/8" hole through the firewall as shown, angled outboard to allow the cowling to clear the vent line.

Cut a 6" length of 3/8" OD 3003-0 aluminum tubing and 5MIN it into position as shown.

Install Ryan Herco tygothane clear tubing 0505-107 (3/8 ID - 1/2 OD) and 0716-020 tee as shown to complete the vent system on the firewall. Use loops of .041 safety wire through the firewall to mount the 0716-020 tee firmly in place (See Pg 36 & 35

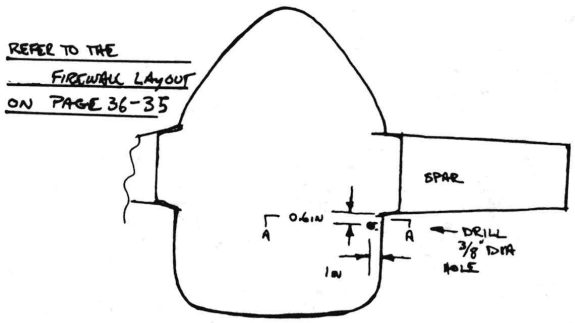

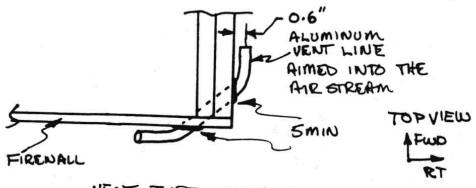

VENT TUBE INSTALLED

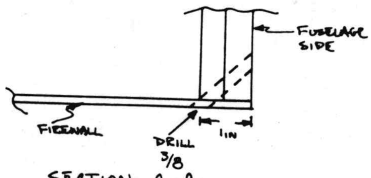

SECTION A-A

FUSELAGE TANK

Refer to "Section I," chapter 22, step 3. Do not install the urethane foam along the rear of the plexiglass. Cut the FT30 bulkhead from 9 mm, 6-lb PVC to fit as shown to the firewall. Attach it temporarily with a couple dabs of 5-MIN. Cut out FT31 from 9 mm PVC foam, heat-form it (in an oven at 300°F or with a high-watt hair dryer or heat gun) to fit around the top between the plexiglass and the firewall. Trim as required. Mount it with micro to the plexiglass and with 5-MIN dabs to the firewall. Now, complete step 4 and 5 of chapter 22. When cutting off the canopy (page 22-4) change the 4" and 5½" dimensions at the back to 5½" and 8" respectively. Fabricate FT32 bulkhead and FT33 bottom pieces to fit as shown, leaving room at the bottom sides for the shoulder harness attach points and main wing vent tubes. These parts are not dimensioned. They have to be custom-fit due to variances in canopy size.

Cut the tank away from the fuselage, leaving the small side pieces in place. Bond the FT30 and FT32 to FT31 with wet micro holding in place to cure with nails. Place a strip of Vinyl tape or shiny-surface duct tape on the inside of FT32 where the visible fuel gauge is located. Layup one ply BID at 45° on the entire inside and on the inside surface of FT33. This layup should be wet to avoid pin holes.

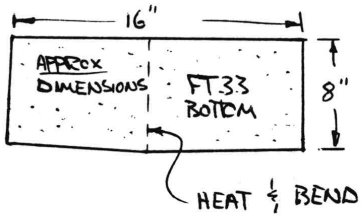

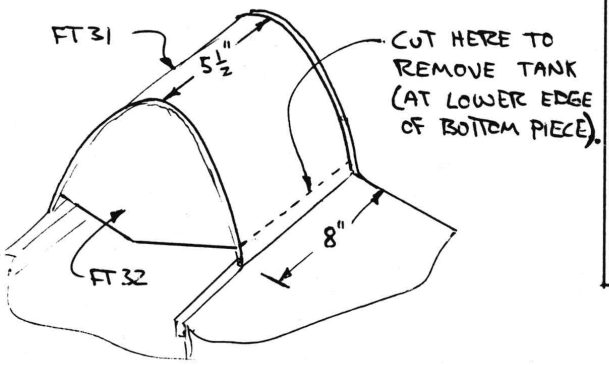

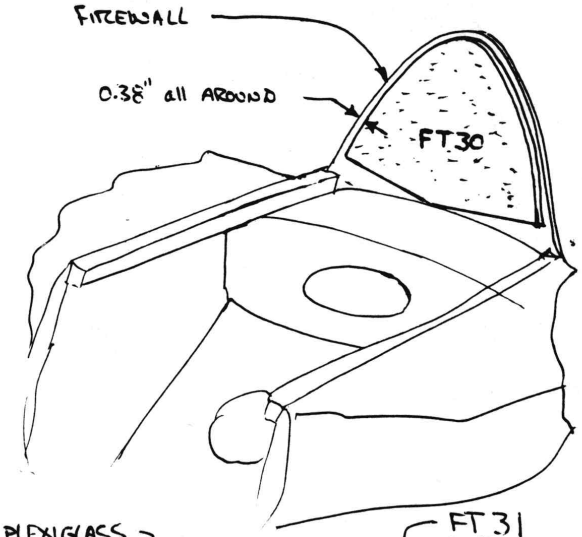

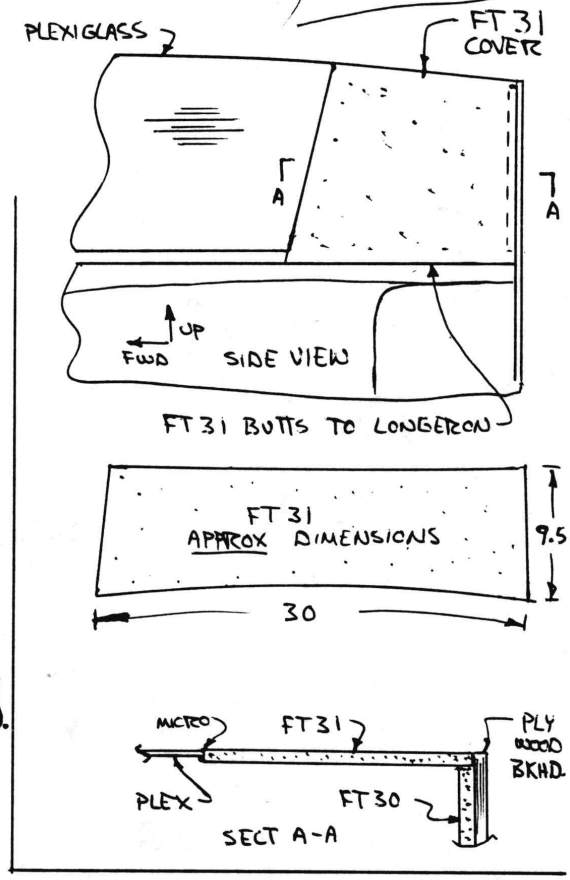

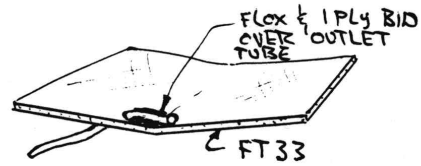

Mount the fuel outlet in the forward center of FT33. The outlet is a 6-inch length of 3/8-inch soft aluminum tube. Sand its surface dull for bonding. Mount it at an angle as shown to bond along about 2 inches of the tank inside bottom. Flow in a liberal amount or wet flox and cover with 1 ply BID. This gives the outlet extra durability so it will not break loose. Before bonding, form the outlet so it will eventually lie along the front face of the center-section spar and not interefere with the hole in the spar or shoulder harness attachment. The outlet should not be bent after it is cured, as this can induce cracks or leaks. Fabricate a screen and install as shown in "Section I," page 21-4.

Now, bond FT33 to the tank with flox. When cured, remove the foam from the face of FT32 over the vinyl tape and remove the tape. Be sure the outlet is open to relieve any pressure during cure. Round all edges of the tank and glass it with two plies BID, lapping 1" onto the existing glass on the outside surface of FT31. Use peel ply to transition the exposed edges. Be careful to get no traces of micro on the visible fuel gauge. The gauge gives a good visible indication <u>only</u> if it is not contaminated with micro foam or air.

When cured, test for leaks using an altimeter with 1500-ft pressure. Identify any leaks with soap bubbles applied with a brush. Rinse and repair per "CP" 14. Cut a 2-1/8" hole in the top using a hole saw. Clean out contamination with a vacuum cleaner (tape a 1-inch tube to the hose to reach in). Bond in the Brock VariEze fuel cap (FT18). Drill a #40 hole in the cap to provide a vent.

Mount the tank to the fuselage with a 1-ply BID strip all around its edges. This will allow it to be removed if later required. Drill a ½" hole in the aft seat bulkhead for the 3/8" ID x 1/16 wall Tygothane tubing.

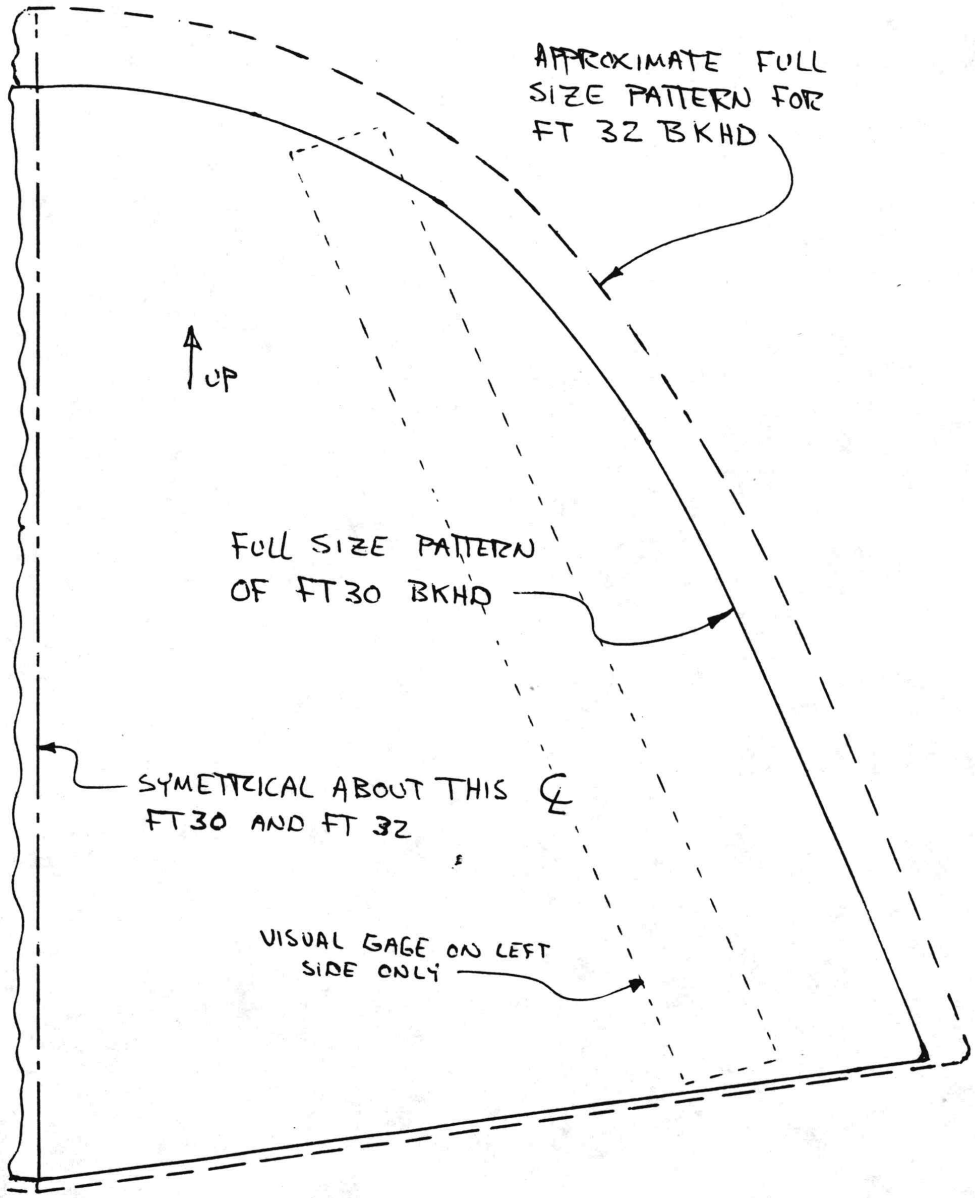

FUEL VALVE INSTALLATION

Locate your Weatherhead #6749 valve. Remove its handle and disassemble the valve. Carefully remove any burrs in the valve ports that can scratch its Delrin plastic spool. Chuck the handle stem in your drill and using emery paper remove enough of its diameter so it will slip inside the valve torque tube. When about .007" is removed it will slip inside the 3/8 x .035 2024T3 tube. Reassemble valve.

Cut the alum tube to 68.5 inches long. Mount the tube to the valve with two #8-32 screws as shown. Fabricate the FV1 plywood piece and bolt it to the valve with two AN4-6A bolts.

Fabricate the FV2 plywood piece and mount to the right forward armrest as shown in the upper right of page 19-5 of "Section I" (2nd edition). Fabricate the handle and drill it into the tube, clocking so it will be outboard for "off," up for "fuselage" and inboard for "wings." Do not mount it until final installation.

Now, grab the tube/valve/FV1 assembly and thread it into the fuselage passing through the CS118 hole in the backseat area and through FV2. The tube will have a gentle bend and should not bind on the seat bulkheads. When you are satisfied it fits well and clears all controls, bond FV1 to the fuselage side and <u>let cure</u>. Then remove the two AN4-6A bolts, remove the valve and layup 1 ply BID on each side of FV1 lapping onto the fuselage side.

Round up the plumbing parts shown and install them on the three valve ports using Teflon tape. Install the Tygothane tubing with the hardware shown. Do <u>not</u> substitute vinyl, polyethylene, polypropylene or Tygon tubing. They are not near as tough, are not fuel compatible, and get brittle at low temperatures. Tygothane has a tensile strength of 5900 psi and avoids brittleness down to -100°F. Mount the gascolator on the firewall and plumb the aluminum line as shown (pg 17) An alternate (better) method is to use the gascolator installation bracket shown on page 100 of the 1978 Aircraft Spruce Catalog which mounts the gascolator with one port facing the firewall to allow direct routing of the fuel line through the firewall.

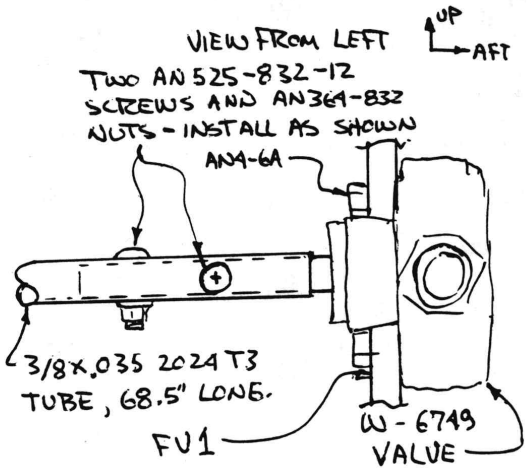

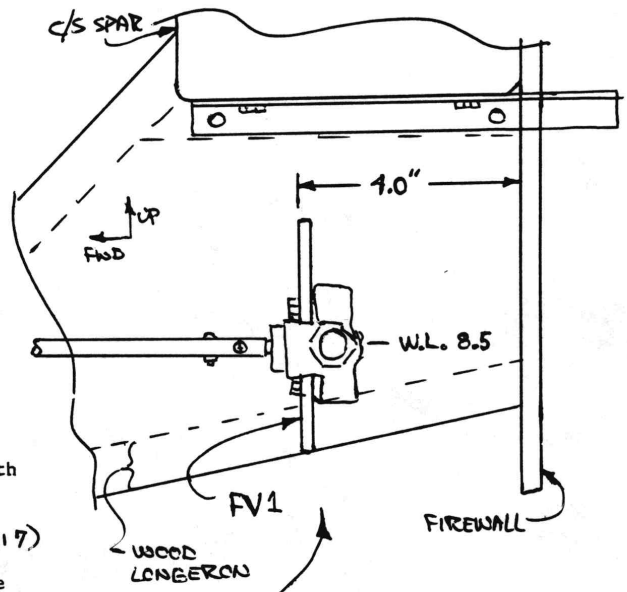

USE THIS SKETCH TO LOCATE VALVE AND FV1 ON RIGHT INSIDE FUSELAGE SIDE.

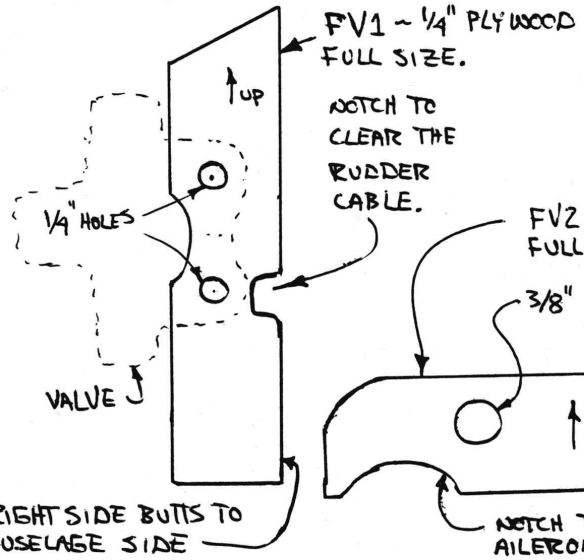

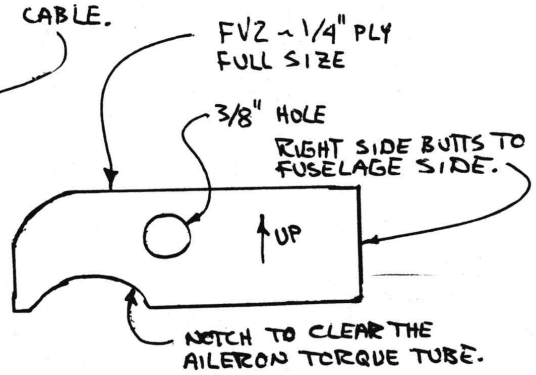

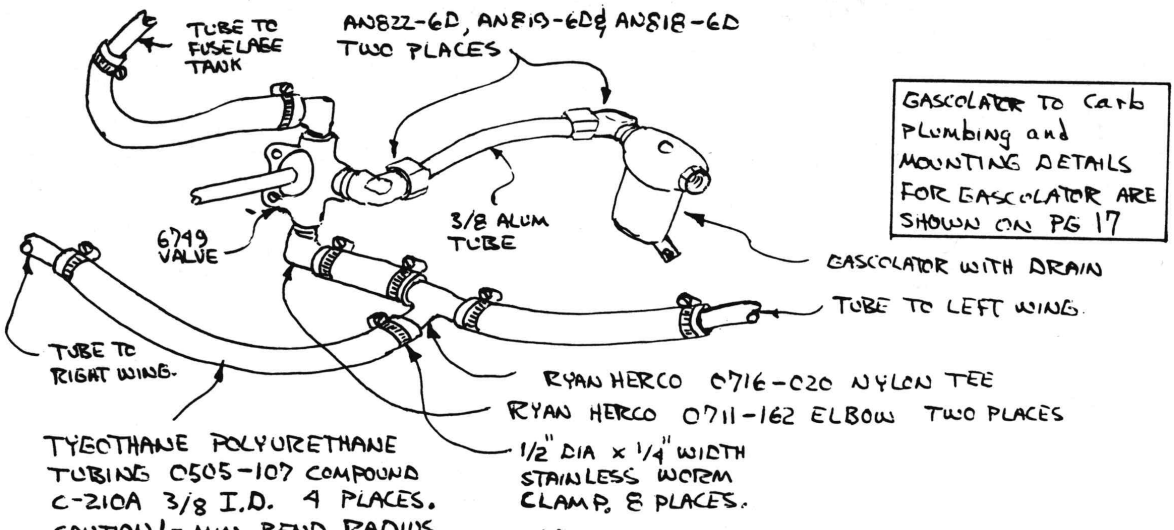

FUEL VALVE HANDLE IN FRONT COCKPIT - TWO CONFIGURATIONS, TAKE YOUR PICK.

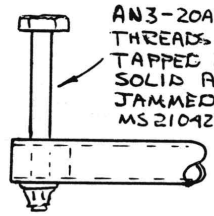

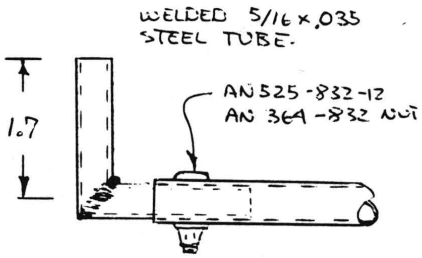

Step 6

Installing the Carburetor Air Filter and Valve

You need to go down to your auto parts store and get a purolator #AFP-117 or an A.C. 448C air filter.

Locate your filter on the firewall low and to the far left as shown ON PAGE 37, BUT DON'T LET it chafe on the brake line, throttle quadrant cables, or the fuel valve block. Draw around the outside of the filter and then set it aside. Next fabricate the air valve shown below AND ON PAGES 12 AND 36

AIR VALVE BODY

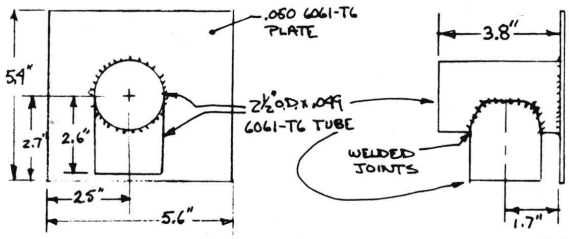

MATERIALS FOR THE VALVE ASSEMBLY ARE 2½" O.D. x .049 WALL 6061-T6 OR -T4 TUBING AND .050 6061-T6 SHEET. HELIARC WELD.

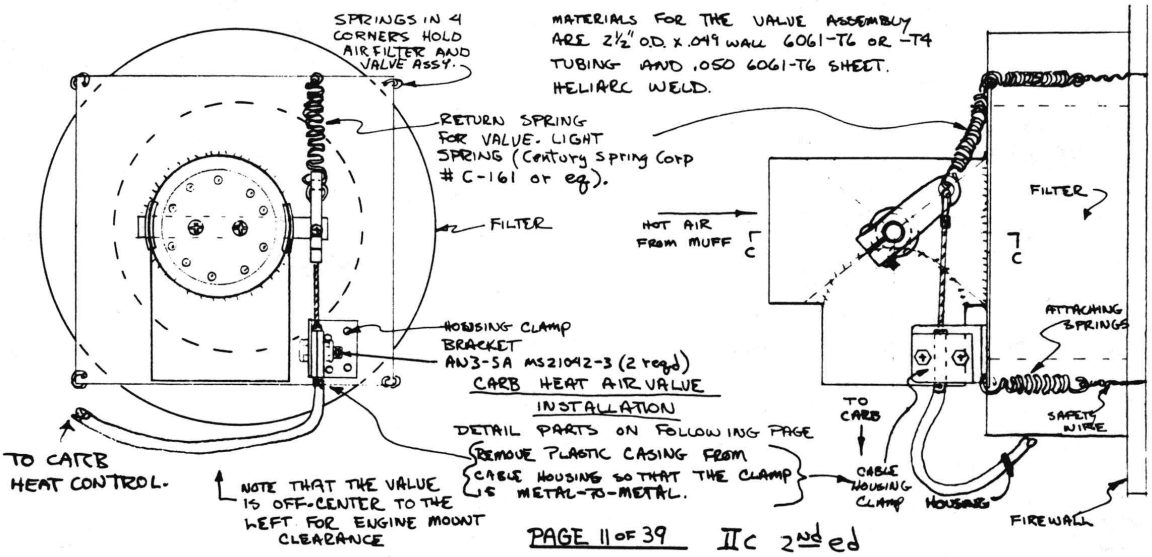

CARB HEAT AIR VALVE INSTALLATION

DETAIL PARTS ON FOLLOWING PAGE

REMOVE PLASTIC CASING FROM CABLE HOUSING SO THAT THE CLAMP IS METAL-TO-METAL.

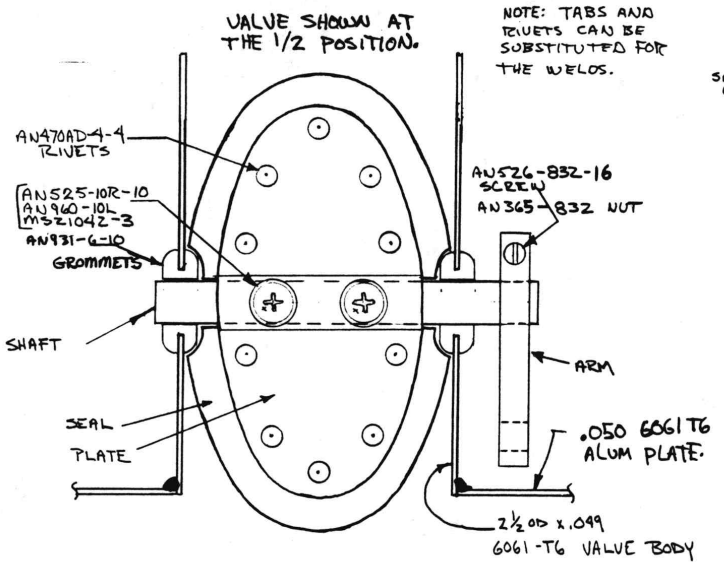

CARB HEAT VALVE ASSEMBLY

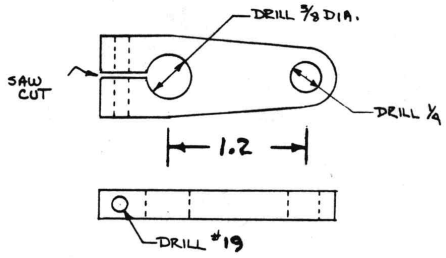

VALVE ARM USE .25 THICK 2024-T3 ALUMINUM. 1 REQUIRED.

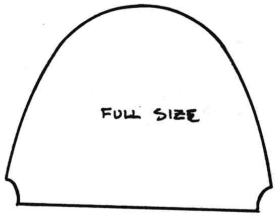

HEAT VALVE SEAL
2 REQUIRED RUBBER ASBESTOS
(SAME AS USED FOR BAFFLE SEALS).

SECTION C-C
FULL SIZE

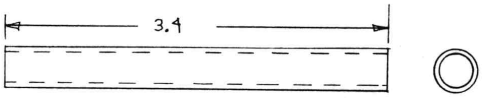

HEAT VALVE SHAFT - 1 REQ'D 3/8 O.D. x .049 WALL
2024-T3 TUBE

FULL SIZE

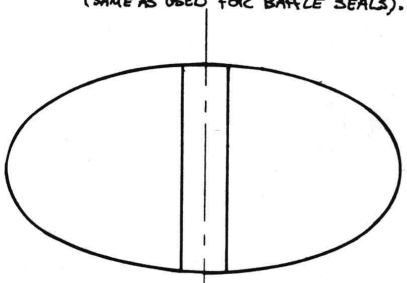

HEAT VALVE PLATE 2 REQ'D
.025 6061-T6 ALUMINUM
FULL SIZE

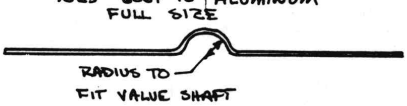

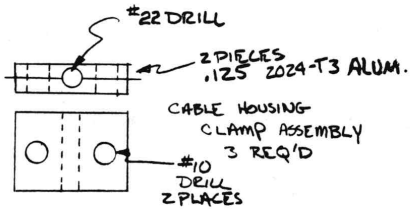

MAKE 3 ASSEMBLIES, USE ONE FOR THE HEAT VALVE. THE OTHER TWO ARE FOR THROTTLE AND MIXTURE (STEP 19).

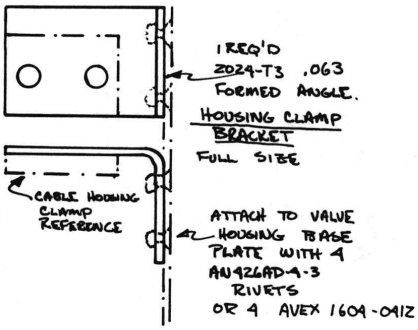

Locate your air valve over the outline of the filter so the four corners overhang it equally and mark the location of the four corners on your firewall. Drill two small holes (1/16") through the firewall and make a loop of .041" safety wire through them as shown at all four corners.

Cut four lengths of 3/8 OD screen door spring as shown and install the airfilter and air valve as shown with the springs holding the valve and filter tightly against the firewall at all four corners.

Step 7

Go back to section I, chapter 23, step 2, and install the bottom cover. CHAPTER 23, STEP 4 (SIDE CONSOLES) MAY ALSO BE COMPLETED AT THIS TIME.

Step 8
Mounting the Engine

This step requires two or three strong friends or an engine hoist.

Load the front cockpit area with ballast (or your favorite sexual counterpart) so the airplane doesn't tip over when you have the engine on the mount. Pick up the engine (or hoist it), hold in position, install the shock mounts, attachment bolts, and nuts listed below. Be careful not to bash your engine mount or accesseries as you fit the engine up to the mount. Support the engine weight until all four bolts are in place with the nuts on.

Engine Mounting Parts

TYPE ENGINE	NUMBER PARTS REQ'D	LYCOMING PART No.
LYC. 0-235	8	71032 cup, rubber
	4	AN6-43 bolts
	4	AN970-6 washers
	4	AN310-6 nuts
	4	½"O.D.x.060 wall steel tube spacer, 1.89 long.
	4	cotter pins

(SEE BREAKDOWN BELOW)

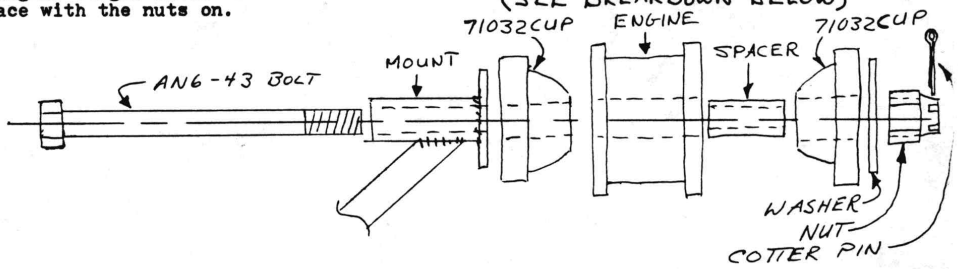

Step 9

Air Induction System

Install your inlet flange onthe carb. Use a gasket sealing compound to seal it (not silicone rubber or bathtub caulk) against leakage. The sealant must be fuel proof.

Next, mount your CAT-10 (black) inlet hose to the flange. Pay careful attention to the clamping details shown.

Route the inlet hose to the bottom of the air valve and clamp it in place similar to the detail shown. The inlet hose should not be streched tight. A little slack is reqiured to allow for engine movement in operation. Drill a ¼" hole in low point of inlet hose to allow exess fuel (during starting) to drain. This will prevent engine flooding.

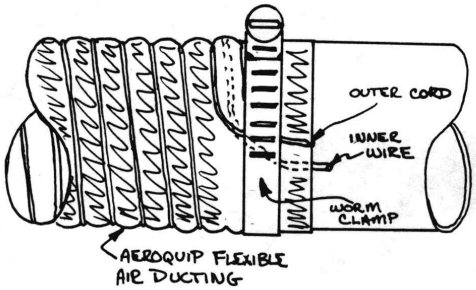

FLEX HOSE CLAMPING DETAIL

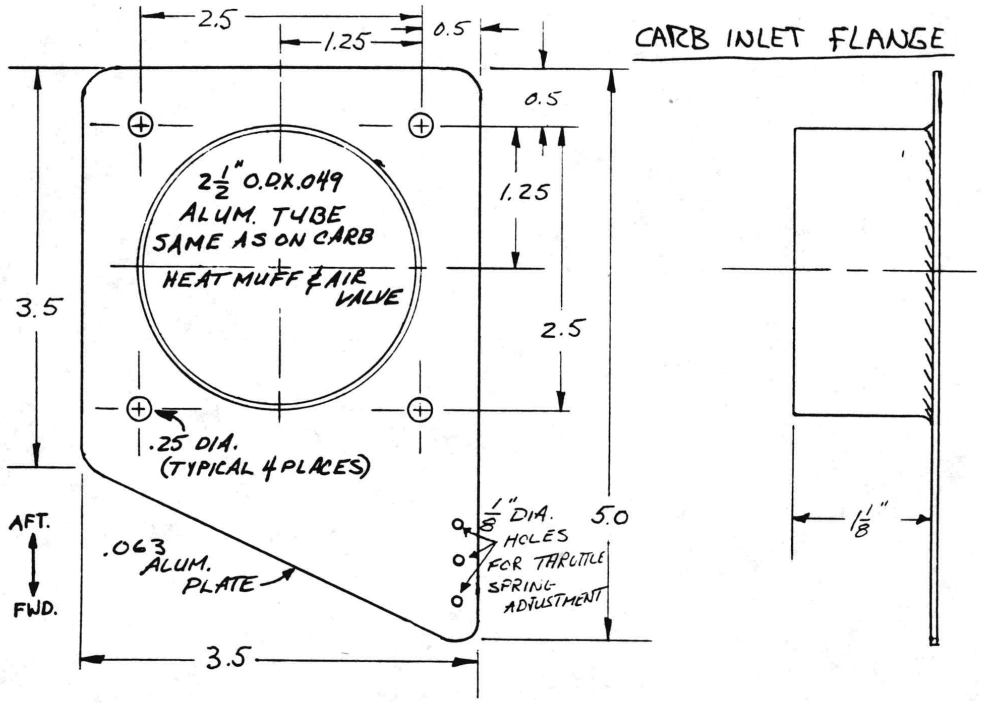

CARB INLET FLANGE

CARB. AIR HOSE RECEPTICAL - VIEW FROM BELOW

FULL SIZE

STEP #10

Exhaust System Installation

Half-size scale drawings of the four exhaust pipes are shown below. Use Lycoming exhaust gaskets (part no. 65321) on final installation. For initial fit-up purposes don't use your gaskets. The initial "set" taken by the gaskets when the flange is torqued down provides a custom seal for that exhaust pipe and several cycles of installation and removal reduces the effectiveness and life of the gasket. Use 5/16 x 18 brass exhaust manifold nuts with AN960-516 washers (8 ea.) for final installations.

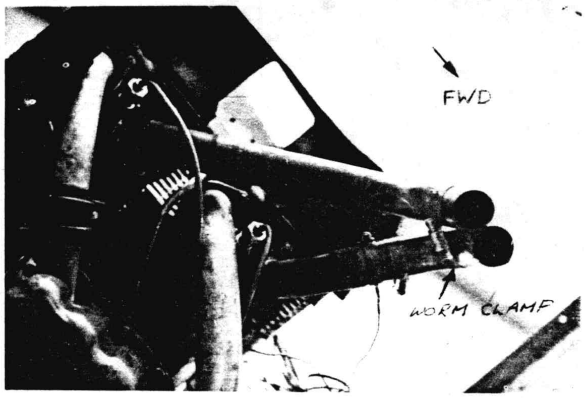

See full size flange detail below.

TOP VIEW RIGHT HAND EXHAUST FWD.→
SCALE: 1/2

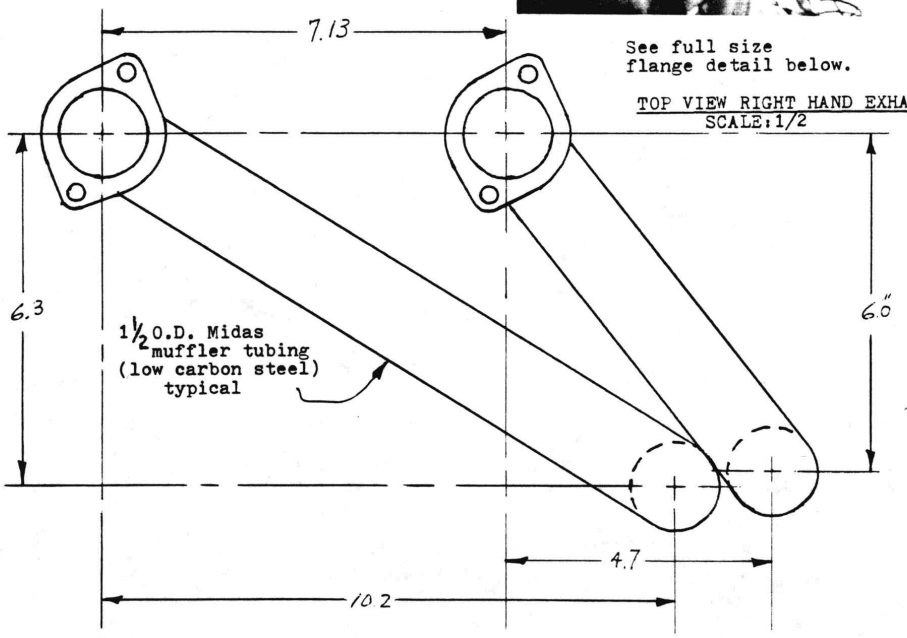

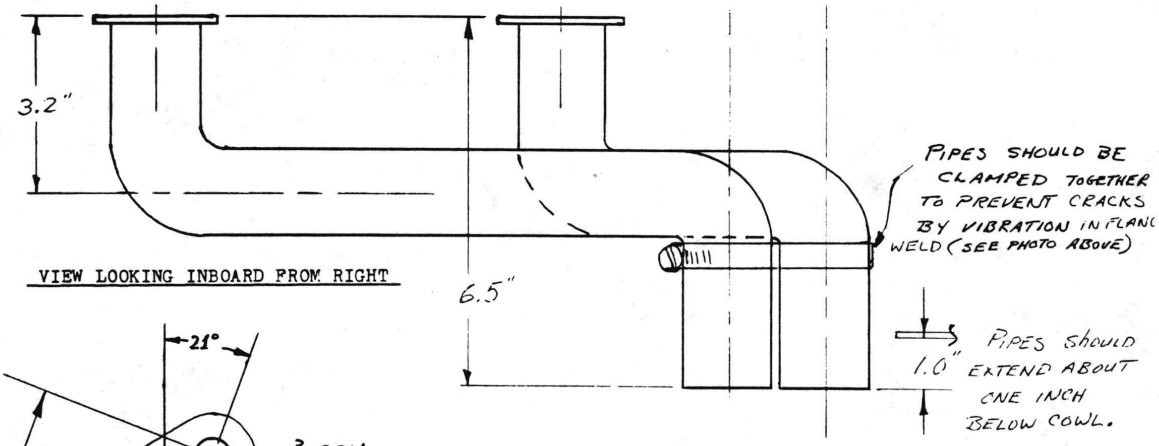

VIEW LOOKING INBOARD FROM RIGHT

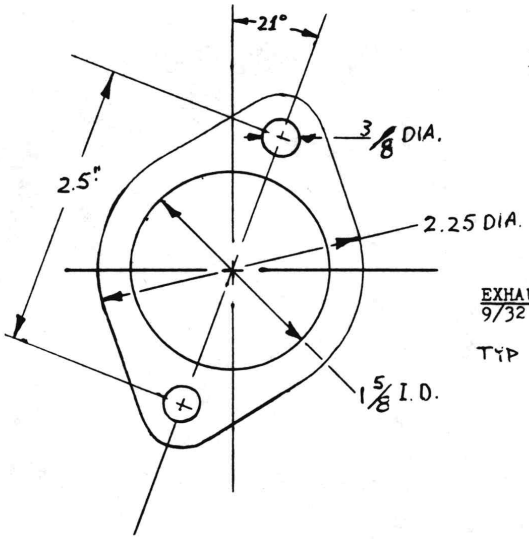

EXHAUST FLANGE
9/32 thick low carbon steel
Full Size
TYP FOUR PLACES

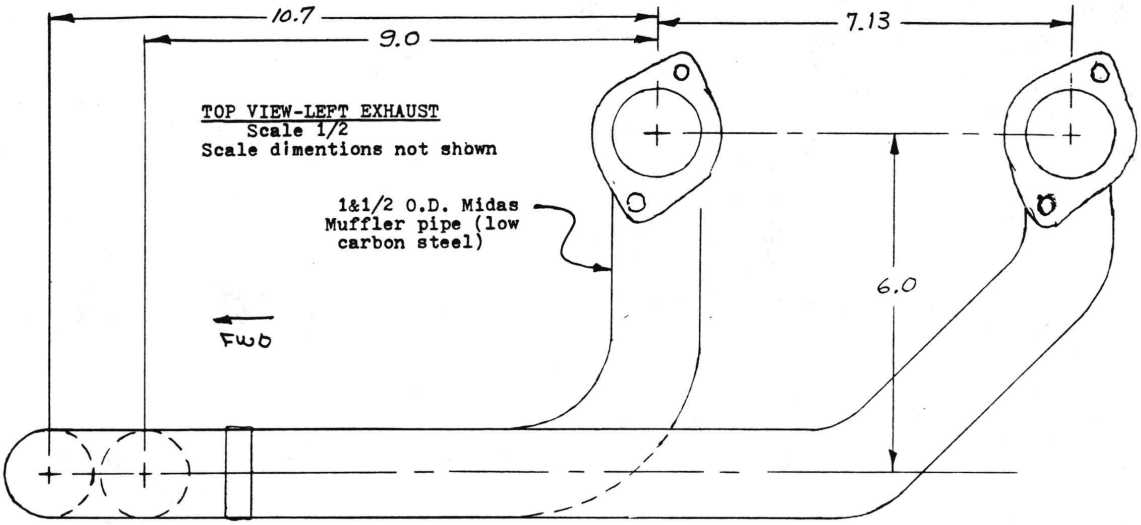

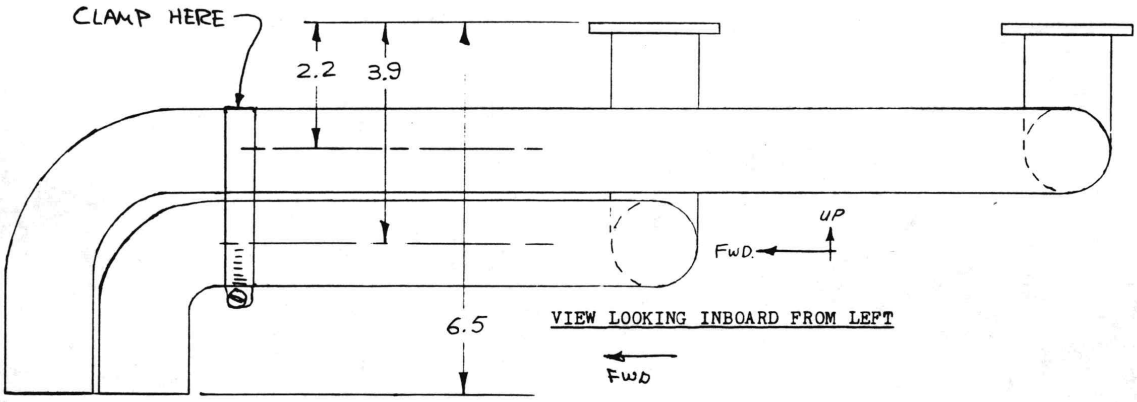

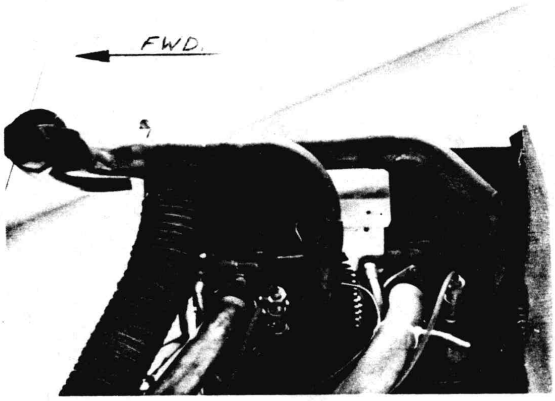

THIS PROTOTYPE CARB HEAT MUF. IS OBSOLETE, SEE PAGE 16 FOR PROPER INSTALLATION.

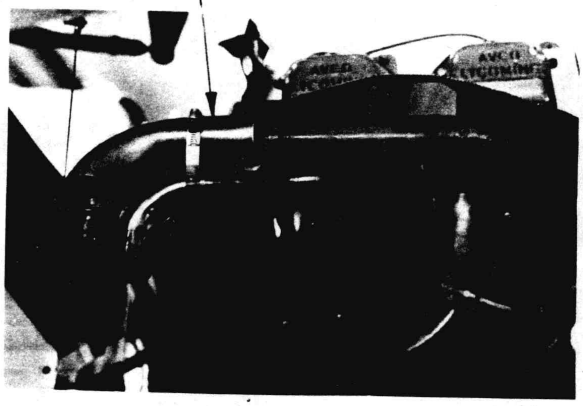

STEP 11

TOP VIEW - CARB HEAT MUFF INSTALLATION

½ SCALE

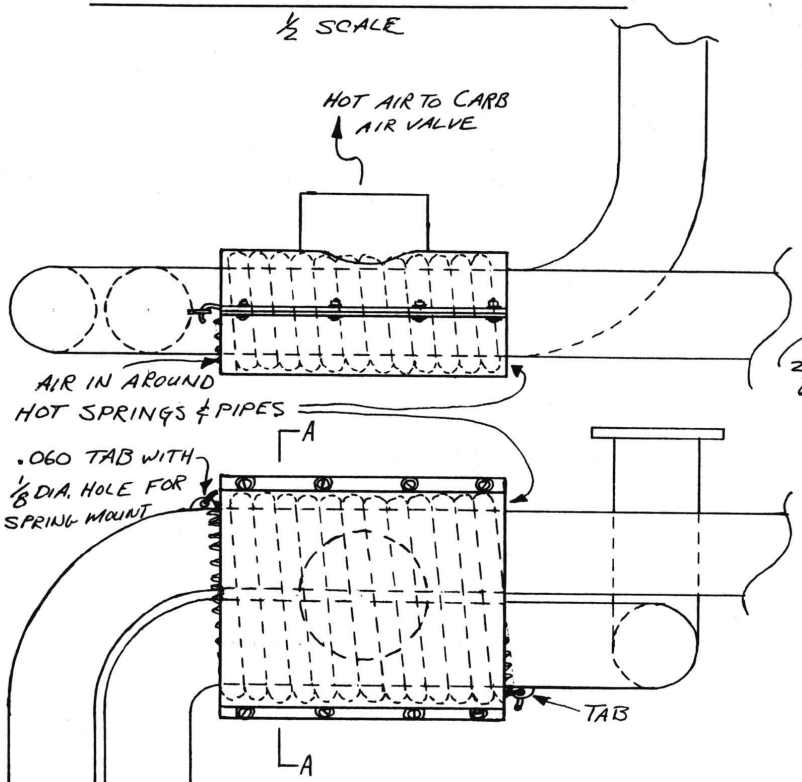

VIEW LOOKING INBOARD FROM LEFT

SECTION A-A

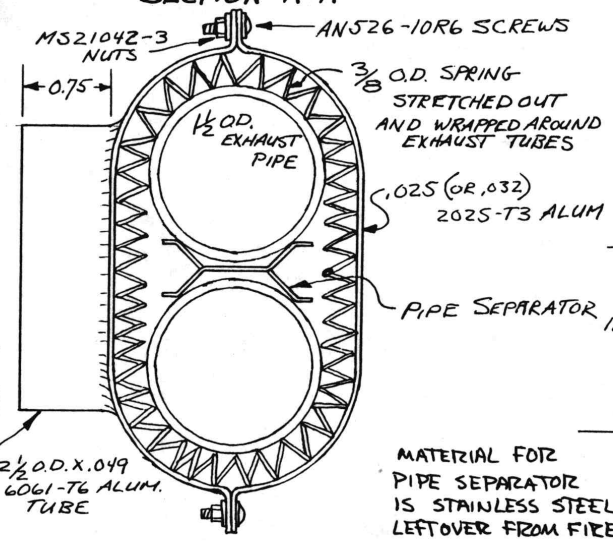

MATERIAL FOR PIPE SEPARATOR IS STAINLESS STEEL LEFTOVER FROM FIREWALL.

FULL SIZE

PIPE SEPARATOR LAYOUT

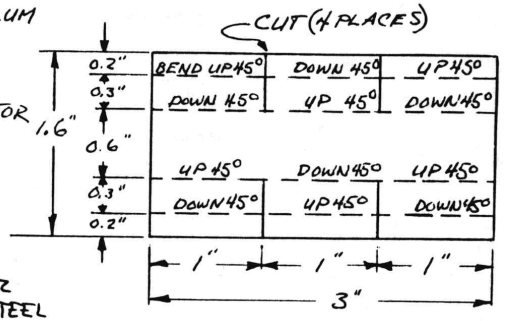

CARB HEAT MUFF LAYOUT (2 REQUIRED, ONE WITHOUT HOLE)

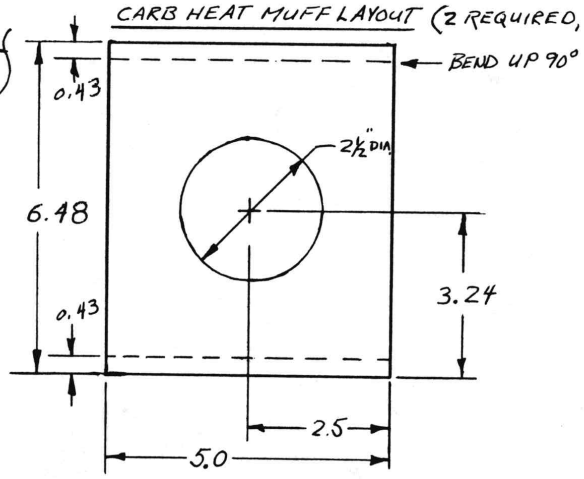

IIC 2nd ed

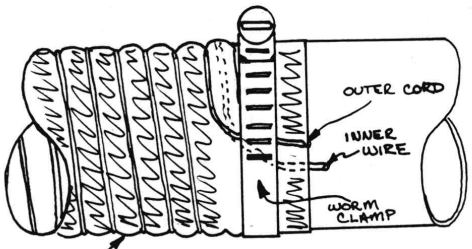

AEROQUIP FLEXIBLE AIR DUCTING
SCAT OR CAT TYPES (DO NOT substitute CEET OR SCEET HOSE)

FLEX HOSE CLAMPING DETAIL

USE THIS DETAIL IN 4 PLACES FOR THE 2½" HOZES (HEAT MUFF AND CARB INLET). BE SURE TO CLAMP CORD & WIRE AS SHOWN UNDER THE WORM CLAMP.

GASCOLATOR & FLOW CHECKS.

The line from the gascolator of the carburetor is fire resistant. It can be assembled from 303 hose with 491 fittings or can be purchased complete (MS28741). It is covered with an Aeroquip fire sleeve.

Now that you have completed the fuel system installation the next step is a fuel system flow check. Note from "Section I" that it is better to install the fuel caps after the airplane has been painted. If you are doing this, you should do the following flushing operations and flow checks after the paint job and cap installation.

First, remove the gascolator bowl, and select "wings" on the fuel valve. Pour one gallon of fuel in each tank and raise and lower the nose of the aircraft and rock the wings as you drain the fuel out the outlet. This will flush any obvious contamination possible left over during fuel cap installation. Reinstall the gascolator bowl. Get a gallon bucket and a stop watch. Disconnect the fuel line at the carburator. Turn the fuel valve off and put two gallons of fuel in each tank. Have your helper hold the airplane level using the W.L.23 longeron as a reference. Turn the fuel valve on. With the aircraft level, let fuel drain into the bucket for three minutes (180 seconds). The open end of the fuel line must be held at the same level as the carburator fuel inlet during these flow checks. The system should supply ½-gallon or more in this length of time (10 gal-per-hr). Dump the fuel after it has been drained; don't put it into the airplane again. Raise the nose 5° and let the fuel drain for two minutes (120 sec). You should get another ½-gallon minimum in this time. Now, lower the nose so the airplane is 2° nose low. You should then get ½-gal in 3 minutes. Next, lower the nose to the parked position and drain all of the fuel from the lines. Add fuel to get two gallons in each tank again; raise the nose to level. Fuel flow should start into the bucket within 10 seconds and maintain at at least 10 gal-per-hour. Level the airplane and drain all of the fuel remaining, to check unusable fuel in level flight. Repeat these tests for the fuselage tank; it should feed 10 gph with the nose 10° down. Hook the line back up to the carb.

Add one gallon of fuel to each tank, mark the level on each gauge in the rear cockpit. Add another gallon to each side, mark and repeat until full capacity is reached. This maneuver calibrates your fuel gauges for level flight and gives you the total usable fuel quantity for your airplane. Repeat for the fuselage tank.

The fuel flow readings in a level attitude are conservative, since the airplane cruises with the nose up one to three degrees depending on speed and weight.

Now, clean the screens in the gascolator and the carb inlet.

GASCOLATOR MOUNTING

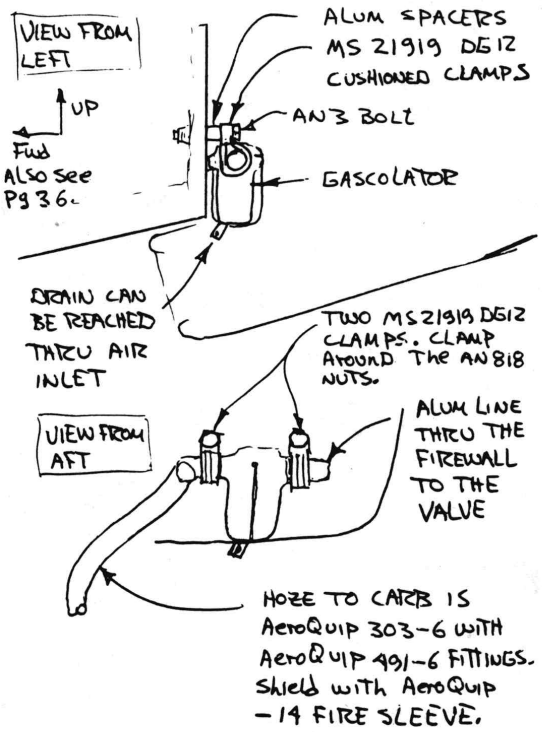

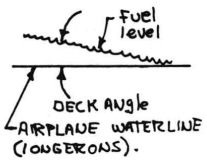

The following is a chart of fuel attitude as a function of indicated airspeed. It can be used to determine the attitude of the fuel with respect to waterline (and fuel gravity head) at any combination of power and airspeed.

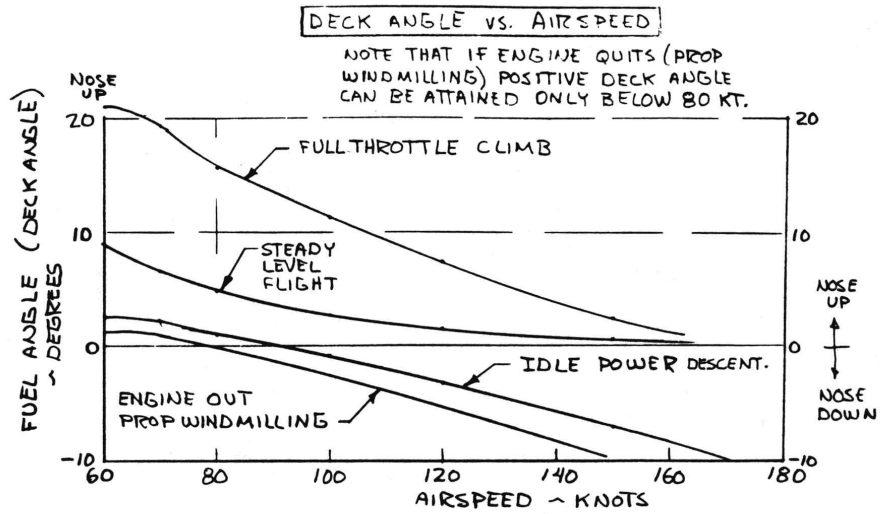

Step 12
Cooling Baffles

Fabricate the baffling from 6061-T6 aluminum using the flat patterns shown on pages 19 through 26. Install the baffling as shown in the accompanying sketches and photos. Use the silicone rubber to seal imperfect fits and as an anti-chafing material.

Do not install the rubber seal strips yet. These are fit in after cowling installation to assure a perfect fit to the cowling.

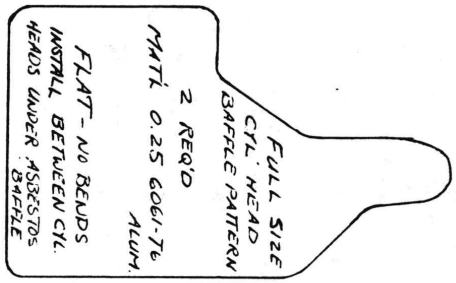

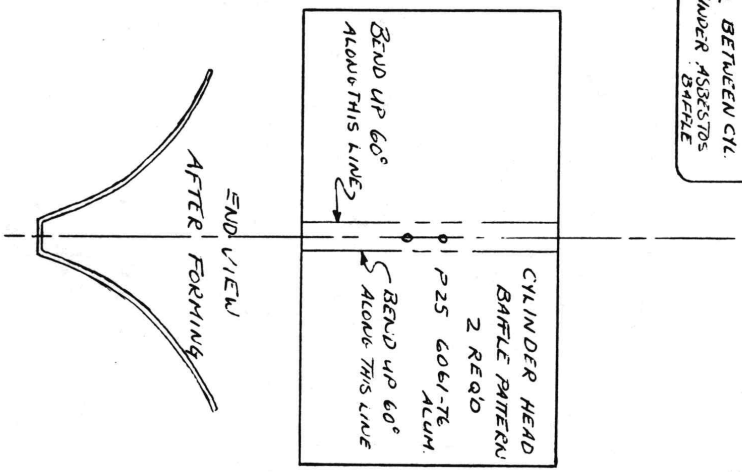

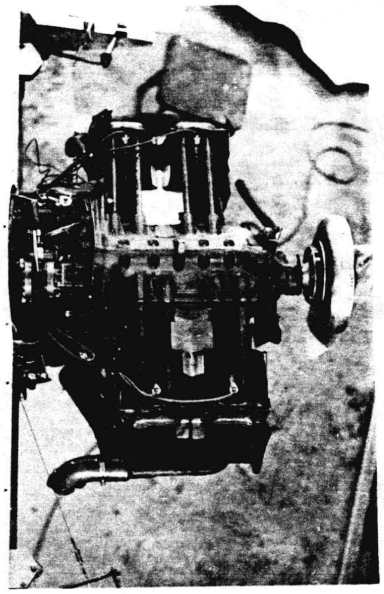

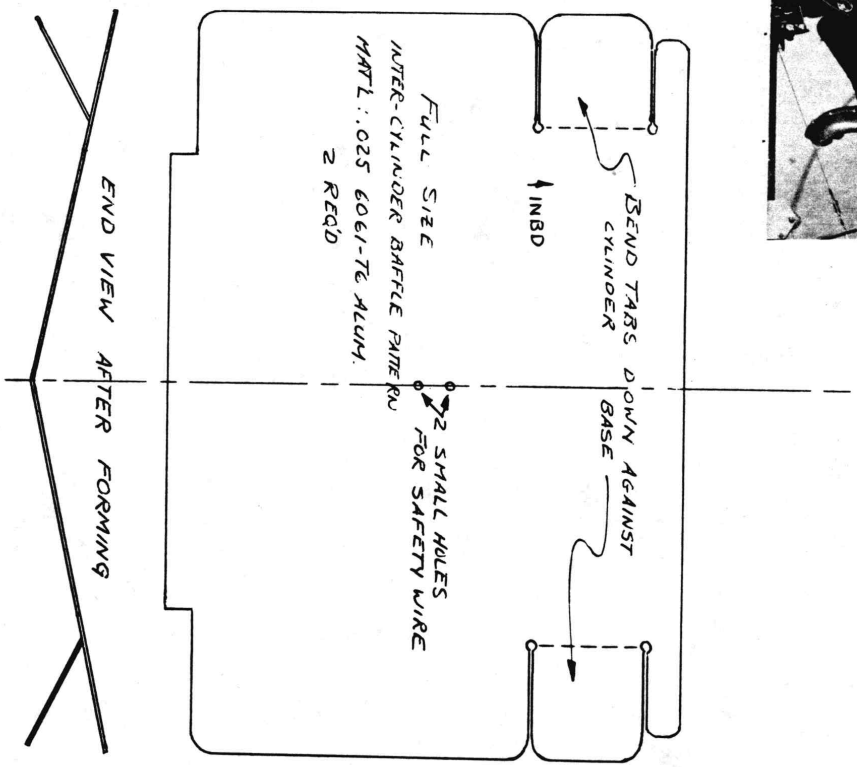

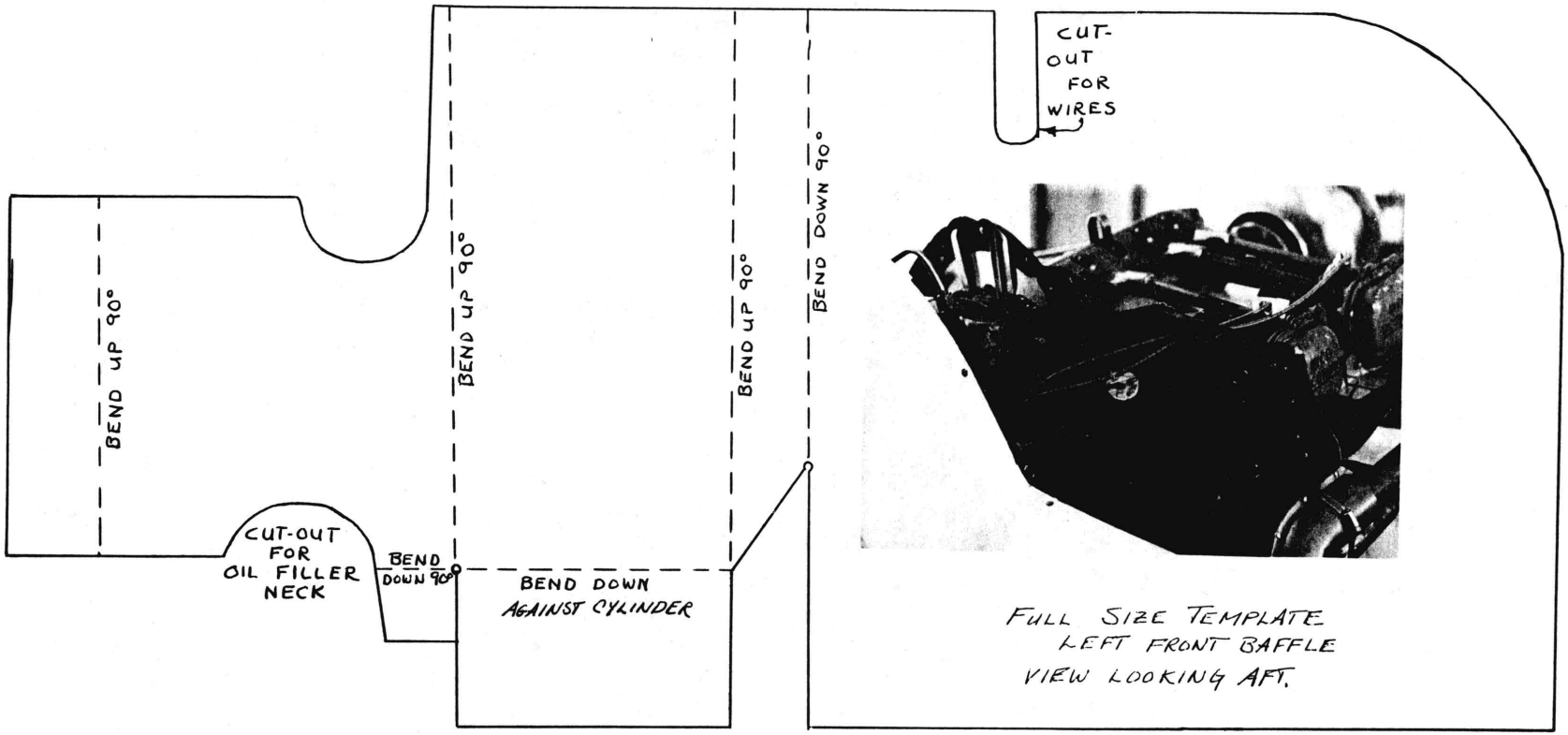

FULL SIZE TEMPLATE
LEFT FRONT BAFFLE
VIEW LOOKING AFT.

IIC 2nd ed

PAGE 20 OF 39

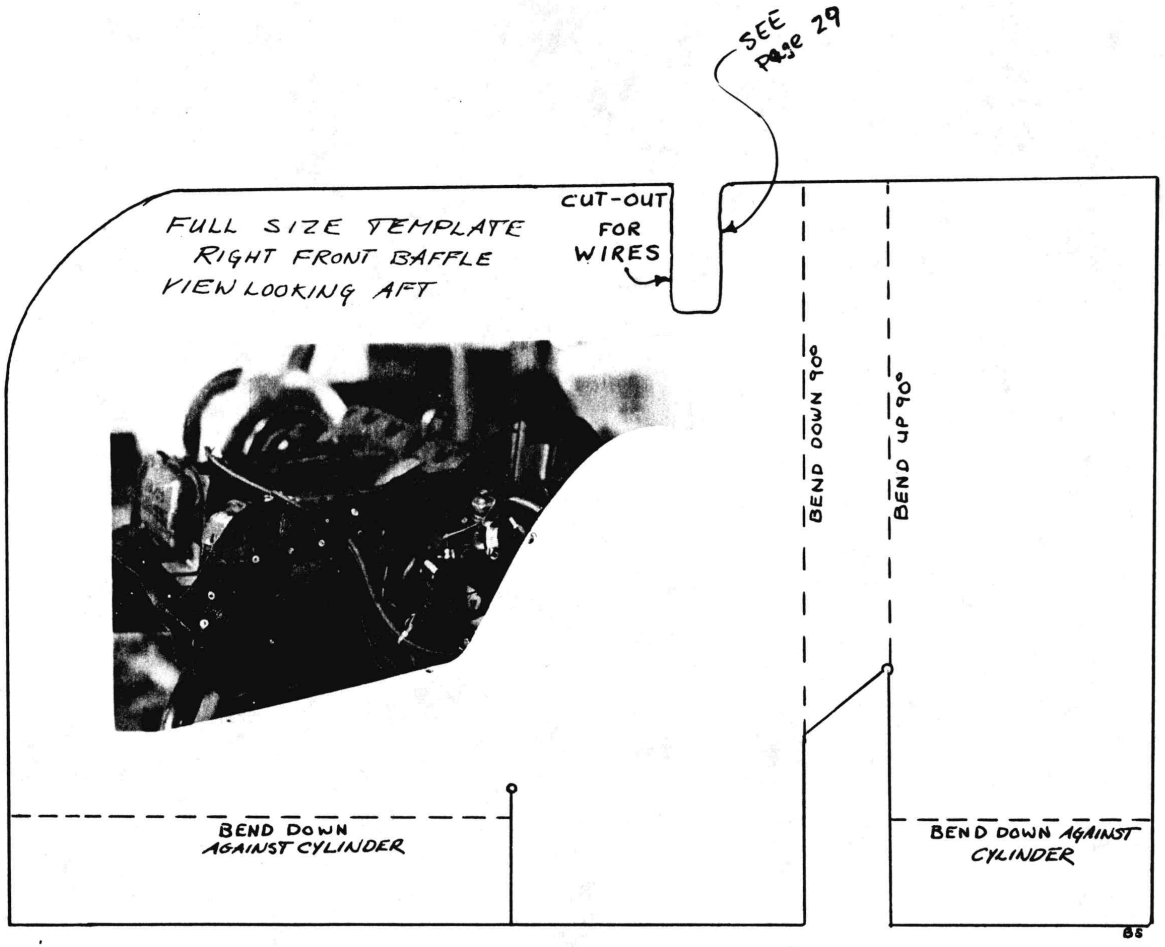
SEE PAGE 29
FULL SIZE TEMPLATE
RIGHT FRONT BAFFLE
VIEW LOOKING AFT
CUT-OUT FOR WIRES
BEND DOWN 90°
BEND UP 90°
BEND DOWN AGAINST CYLINDER
BEND DOWN AGAINST CYLINDER
BS

IIc 2nd ed

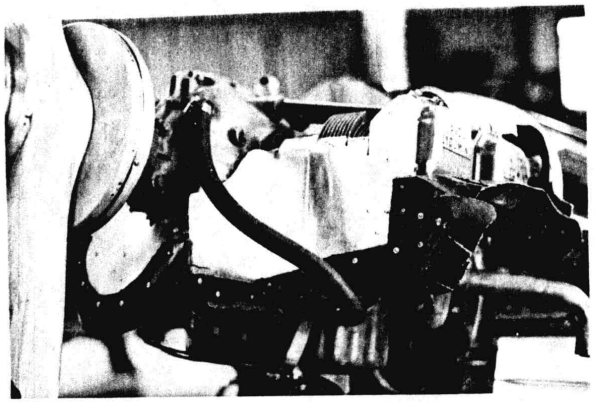

FULL SIZE TEMPLATE
REAR CENTER BAFFLE
VIEW FROM AFT

83

FULL SIZE TEMPLATE
LEFT HALF OF
RIGHT REAR ENGINE BAFFLE
VIEW FROM AFT
BEND UP 90°
BEND DOWN 90°
BEND DOWN 20°
BEND UP 90°
BEND DOWN 90°
BEND
MATCH LEFT AND RT. HALVES AT BREAK LINE

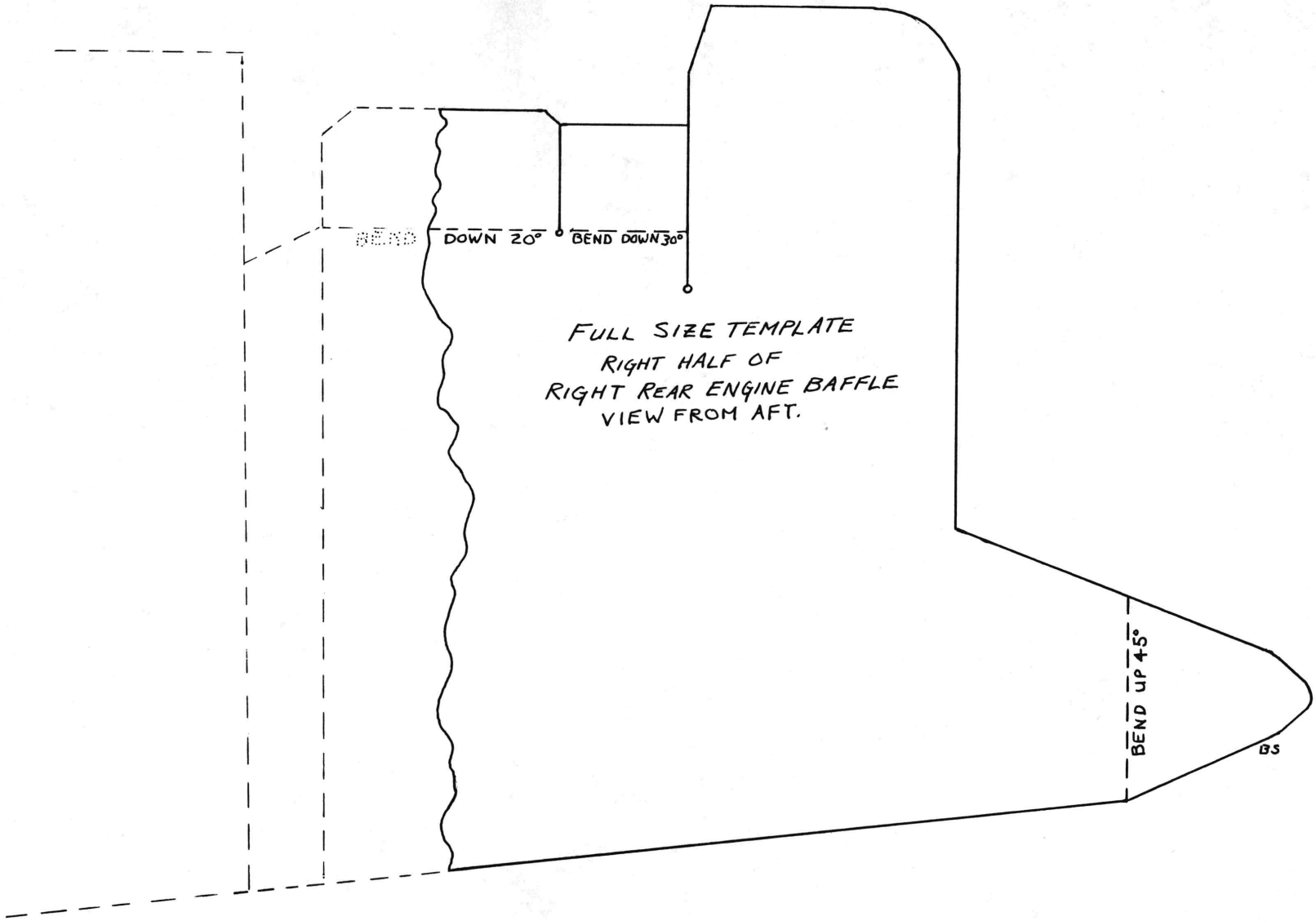
BEND DOWN 20°
BEND DOWN 30°
FULL SIZE TEMPLATE
RIGHT HALF OF
RIGHT REAR ENGINE BAFFLE
VIEW FROM AFT.
BEND UP 45°
BS

IIC 2nd ed

FULL SIZE TEMPLATE
LEFT REAR BAFFLE
VIEW FROM AFT.

FULL SIZE TEMPLATE
FRONT TOP CENTER ENGINE BAFFLE
VIEW LOOKING AFT

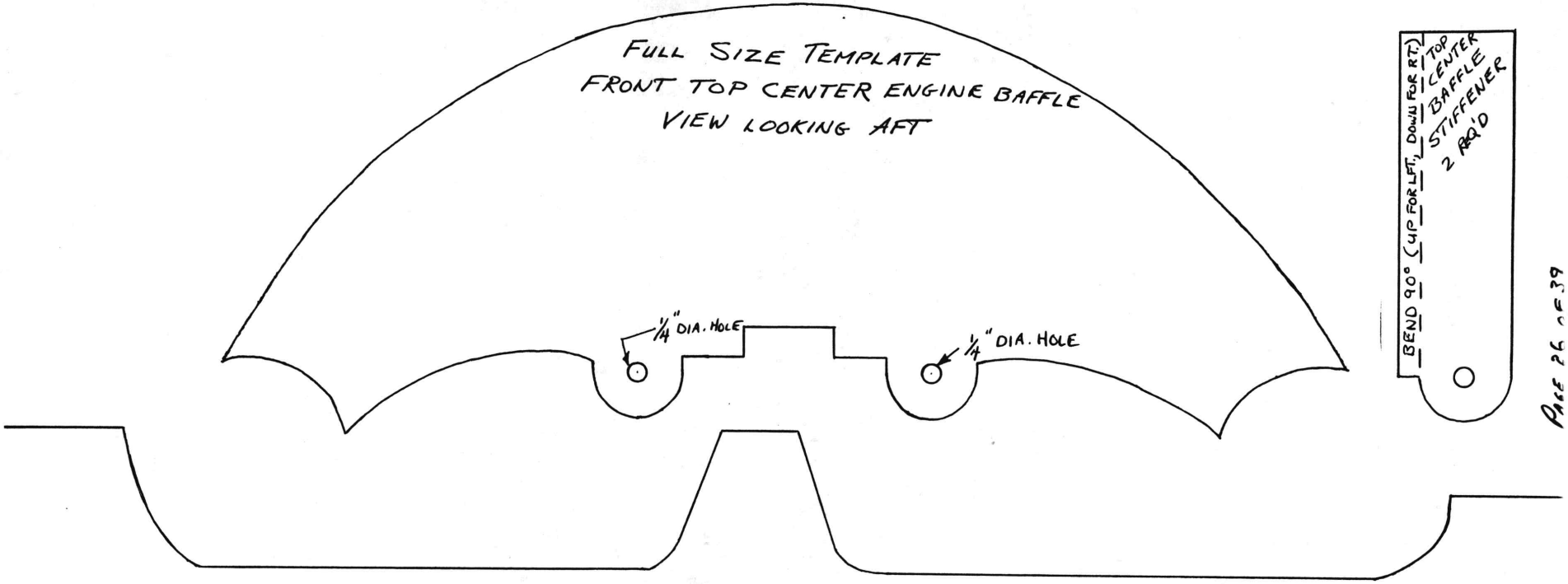

PAGE 26 OF 39

↑ INBOARD

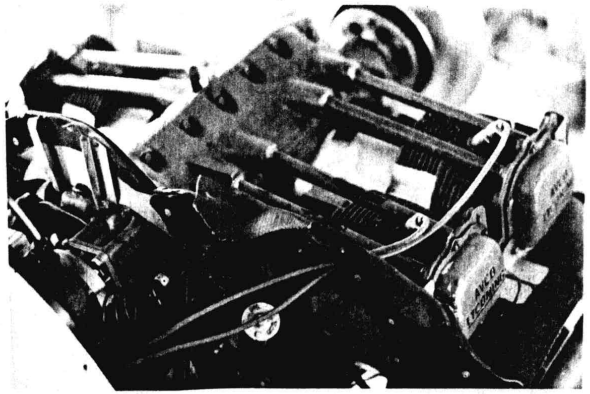

FULL SIZE TEMPLATE
ASBESTOS ENGINE BAFFLE
LEFT & RIGHT SIDES
VIEW FROM ABOVE

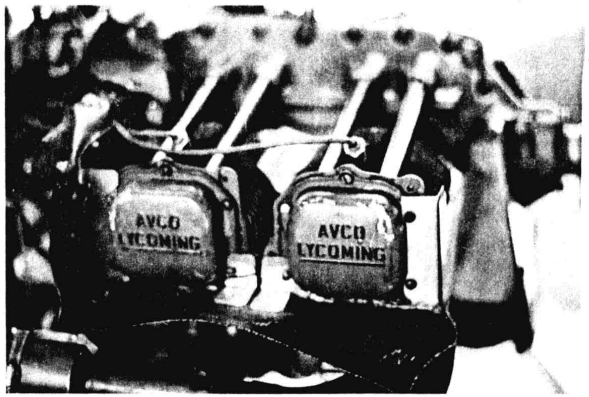

FIG 2

Step 15
Engine Wiring and Controls

It is helpful (not required) to have an assistant to verify control positions and travel in the cockpit while you work on the engine.

First, make all of the metal parts shown.

Install the throttle/mixture bracket on the rear of the carb under the oil sump as shown in the photograph using the two carb studs and one oil sump screw. It may be necessary to loosen all the nuts on the carb to attach the bracket.

Next, run your mixture/throttle cables out past the engine and around to the right 180° & mount to the bracket as shown in the detail at right.

Adjust control travel and spring tension as necessary.

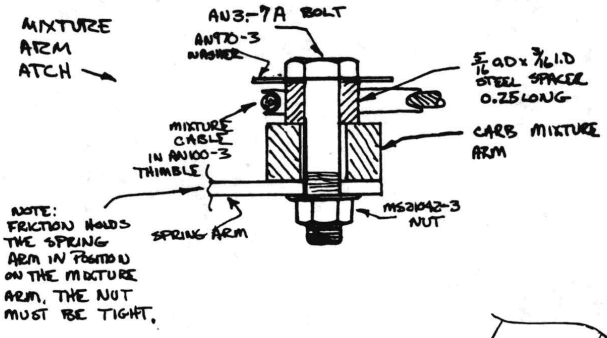

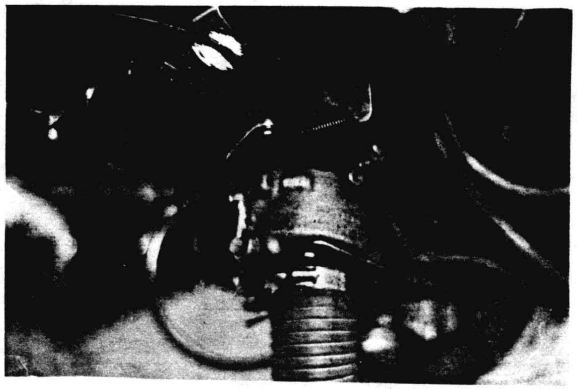

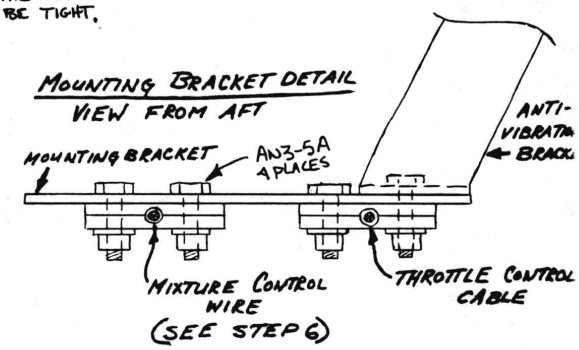

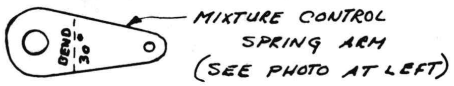

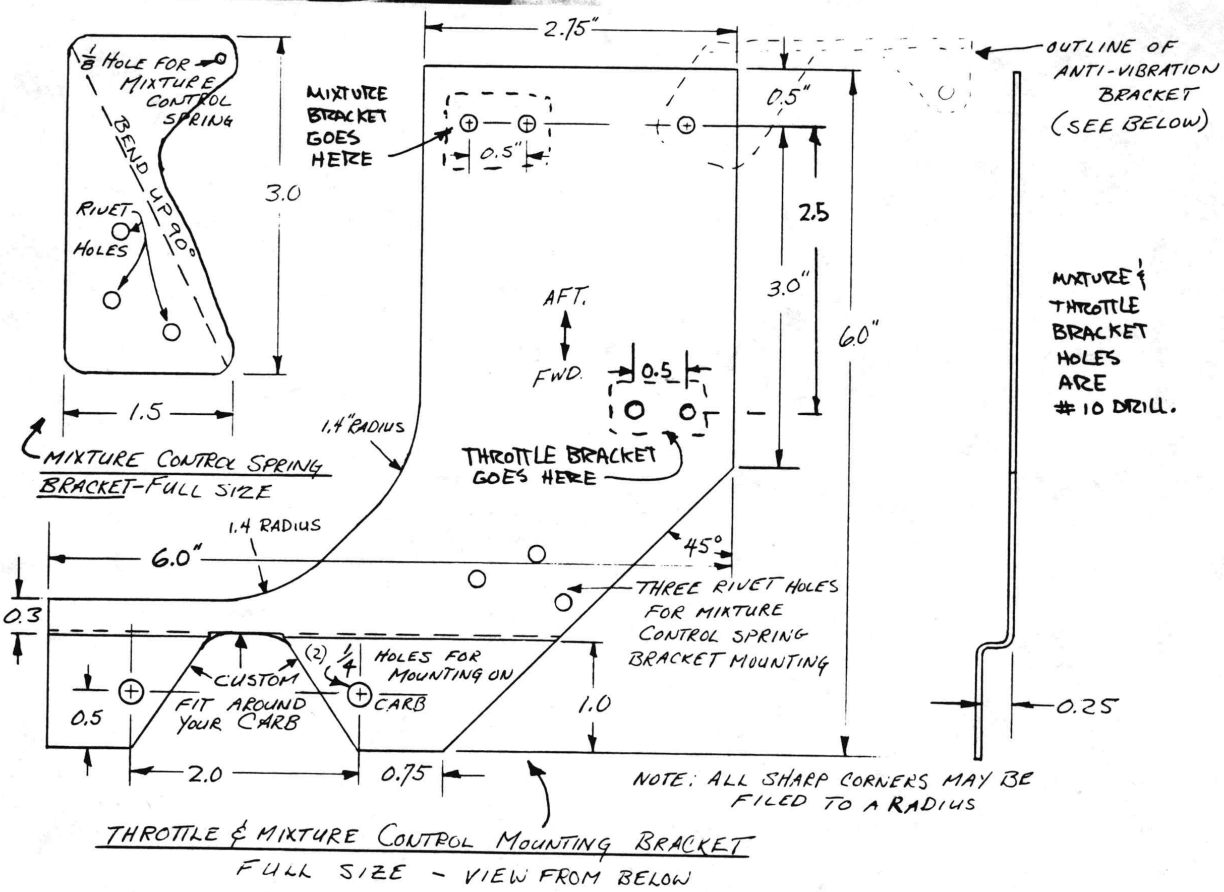

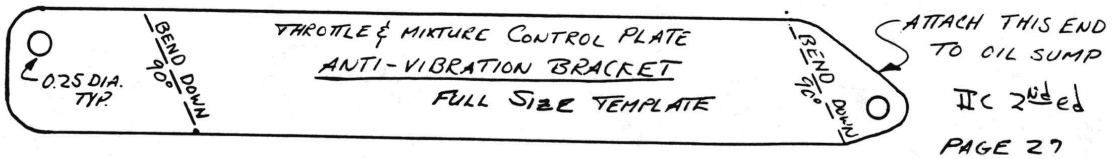

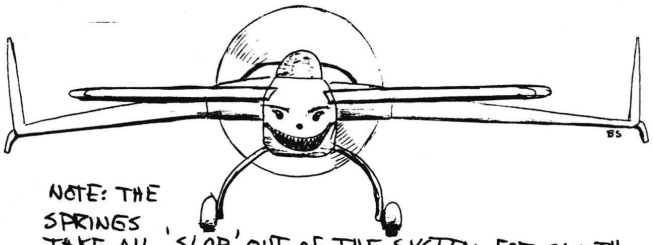

NOTE: THE SPRINGS TAKE ALL 'SLOP' OUT OF THE SYSTEM FOR SMOOTH THROTTLE AND MIXTURE CONTROL. BUT do NOT depend ON THE SPRINGS. THE CONTROLS MUST work WITHOUT THE SPRINGS INSTALLED. CHECK THIS.

Mark the cable housing to be trimmed so that it protrudes about 1/2" beyond the housing clamp (installed on the bracket as shown). Before you try cutting the cable housing to final length try a practice cut way out on the end of the Housing. The idea is to use your dremel (stone grinding wheel) to grind part way through the housing wire, not into the cable (see sketch), and then break the wire with a twist (using pliers). Don't damage the cable inside. With the housing cut to length you can use your dikes to cut the cable. Be sure you have enough extra cable to make a loop around the AN100-3 thimble. Install the mixture arm bracket on the carburetor mixture arm as shown. HookUp The light return spring as shown (Century Spring Corp #161). This spring moves MIXTURE TO FULL RICH IF cable fails. Clamp the cable between your thumb and finger and verify that you have full mixture travel at the carburetor when the mixture control is cycled in the cockpit before you swage the sleeve. If you don't get it perfect an adjustment can be made at the housing clamp. Tighten the AN3-5A bolts and MS21042-3 nuts on the cable housing clamp. Add a dab of silicone rubber over the cut end of the cable; it will save some pain and expletives later.

The throttle cable is installed in a fashion similar to the mixture.

A Century Spring Corp. C-161 spring is used to preload the throttle in the full (open) position.

The Throttle cable is swaged with an AN111-4 cable bushing and 18-1-C sleeve as shown. The cable is attached to the throttle arm with an AN 3-7A BOLT, 3/16 ID x 1/4 OD x .25 long spacer, AN970-3 washer, and MS21042-3 nut as shown inthe sketch. The AN111-4 must rotate freely on the spacer. Double check the throttle travel in the cockpit and at the carburetor before swaging. Dab the cut cable end with silicone rubber.

The carburetor heat cable housing clamp, cable, and return spring are installed as shown on page 11 . Don't force the cable and housing around tight corners; leave enough slack for a gentle loop to the cable housing clamp.

Next attach the ground wire from each magneto to the electrical wires running forward to the mag switches. A schematic diagram is shown for the installation of mag wiring on page 4.

Connect the switches to the aircraft ground as shown. Connect the aircraft ground wire (#10 or #12) to one of the engine mount bolts using an RC10-14 solderless terminal. Install a short length of #10 wire from the mount to a convenient stud on the engine, also using RC10-14 connectors.

Install your CHT probe on the number 3 cylinder, top side (we recommend Westach #712-5W probe and 270A6P gauge). During your initial runs and initial flights you should move the probe to other cylinders. Once the hottest cylinder is determined, leave the probe on it. All cylinders on N6558Z run within 20°F of each other. If you have a wide variation the probable cause is mixture distribution. Follow your engine

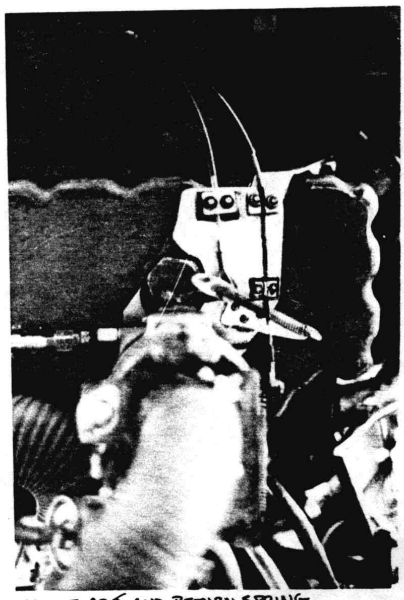

THROTTLE ARM AND RETURN SPRING BRACKET

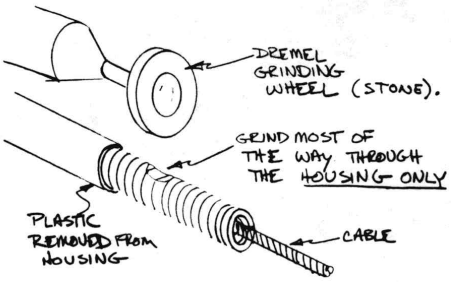

THROTTLE ARM & HARDWARE VIEW LOOKING AFT

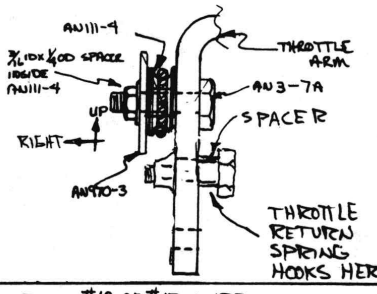

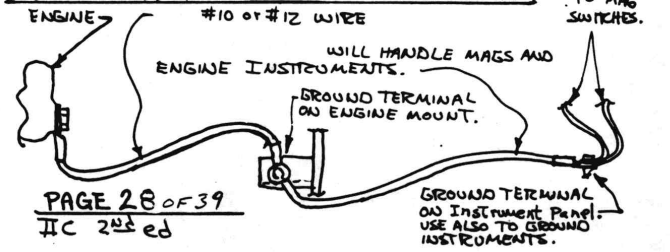

service manual and route the ignition wiring (spark plug leads) to each plug.

Snug the plug caps (shielded harness only) using a 3/4" wrench; don't over tighten. Be sure to guard the ignition wires against chafing on the cylinder cooling baffles using a nylon "caterpillar" or rubber channel AS SHOWN.

The exhaust gas temp probe should be installed on number 2 cylinder exhaust pipe.

Oil temperature may be direct reading (144-in capilary tube) or magneto-powered (Westach #299A2M with #399S sender). Install the sender as recommended in your engine service manual. If you have a 12V electrical system, we recommend the Westach #299A2 gauge and the #399S sender.

The oil pressure line from the engine to the firewall canbe done two ways. The fancy way is to run aeroquip 601-4 armored flex hose from an AN816-4D fitting in the engine to another AN816-4D fitting tied to the engine mount with nylon tie-strap and use an Imperial Eastman 86-L (ALUMINUM) female connector (1/8" dia to 1/8" NPT) to join the oilpressure line to it. The simple way is to run the 1/8" dia oil pressure tubing direct (making three loops BETWEEN THE FIREWALL AND ENGINE for vibration isolation) to the engine oil pressure port using an Imperial Eastman 88-L (ALUMINUM) male connector. The only disadvantage of the simple approach is that you need to be careful not to bash the oil pressure line while working in the engine compartment. WITH EITHER SYSTEM, be sure to route and tie the lines to avoid vibration and chafing.

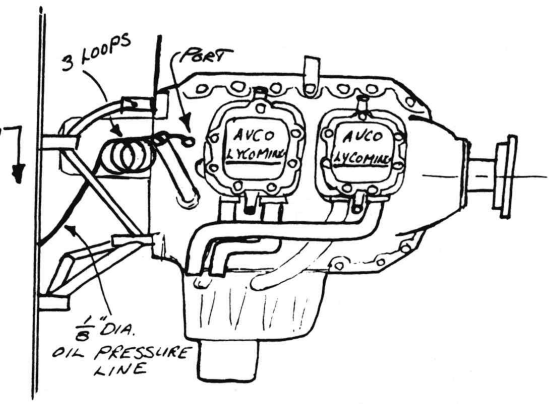

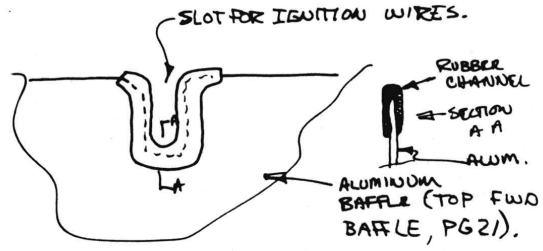

Step 16
Cowling Installation

Moulded fiberglass cowling halves with primer gel-coat finish are available from a VariEze distributor.

The vendor-provided cowling halves will require some additional work as part of the installation on your airplane. You will have to trim the outboard ends to fit your wings, jig the cowl to fit your firewall and engine properly, locate and install the fiberglass end ribs (vendor supplied), layup an attaching flange along the fuselage and spar, install the attaching hardware, and fabricate a composite inlet lip which is sized for your engine. You will also fabricate a sheetmetal oil-check door and access panels for your rudder AND AILERON quick-disconnects if desired.

Those builders who wish to fabricate their own cowling rather than buying, will find dimensional definition at the end of this step.

The cowling is attached to the airplane with #10-32 screws(AN507), nutplates (K-1000-3), and countersunk washers. Camlok type fasteners may be substituted as a quick-disconnect feature along the end ribs and top to bottom cowl joint. Camloks in the fuselage makes cowling installation and removal more difficult. Dzus-type fasteners should not be used because they don't provide adequate shear load-carrying capability.

The distributor-supplied cowling is intentionally supplied extra wide. Hold it in position on the firewall and spar edges, mark along the inboard wing root and trim to fit. with both sides, top, and bottom trimmed spanwise locate the end ribs inside the halves and cleco in position.

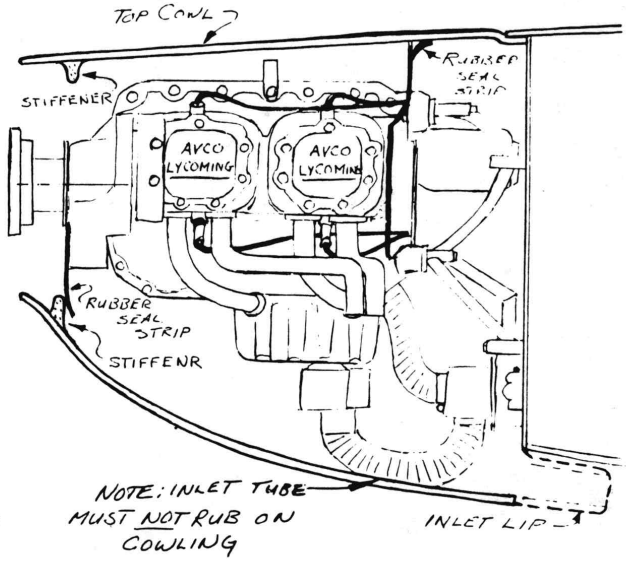

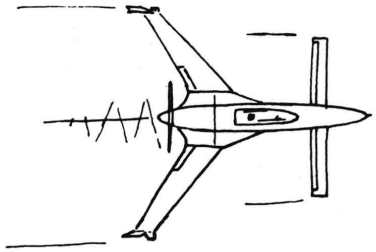

IIC 2nd ed

Assemble the top amd bottom cowl halves together before installing them on the fuselage. Use clecos to hold the halves together for temporary positioning and initial fitup. You may find it desirable to shift a hole slightly on final installation, so save the screw/nutplate or camlok installation until the cowling is fitted to the airplane.

Before you can proceed with the cowling installation you have to cut a hole in the bottom cowl for the exhaust system to exit the cowling.

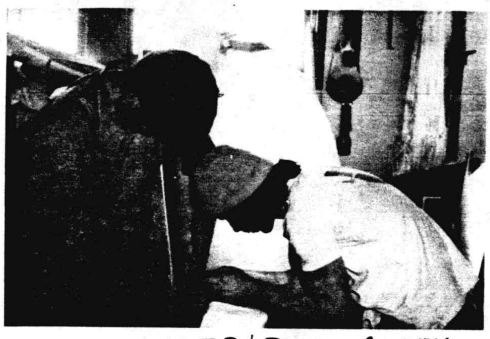

ASSEMBLE THE TOP & BOTTOM COWLING HALVES ON THE BENCH

These holes must be oversize so that engine operational movement is allowed for and so that the cowl can be installed and removed without brutality. This involves enlarging the exhaust exit hole forward so that interference with the mounting flange that you're about to install can be avoided. See THE SKETCHES ON PAGE 31. A slot must be cut in each end rib to allow the rudder cable & aileron linkage to pass through while installing the lower cowl. Once the cowling can be positioned on the airplane, it is held into position using scrap wood blocks bondoed to the airplane and clecoed to the cowling as shown in the sketches.

Locate your spinner backplate on the prop extension and crank shaft. Check that the clearance from cowl is fairly equal top and bottom. Space it if required. Check that the trailing edge of the wing root agrees with the cowling trailing edge. THE VERTICAL LOCATION OF THE COWL CAN BE SHIFTED BY SLIPPING THE TRAILING EDGES OF THE COWLING HALVES LATERALLY WITH RESPECT TO EACH OTHER.

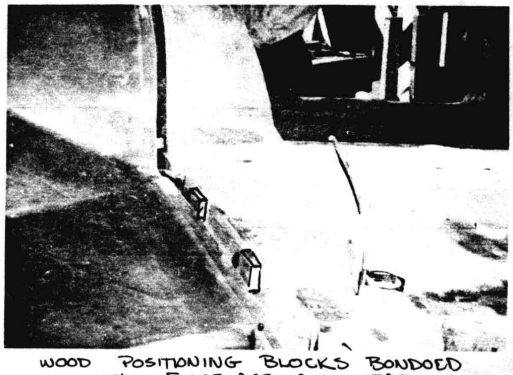

WOOD POSITIONING BLOCKS BONDOED TO THE FUSELAGE AND SPAR (SEE SECTION AA BELOW)

Lay grey tape over the cowl edges adjoining the fusealge and center section spar as shown. This will keep the flange layup from sticking to the cowl.

Next sand the top rear edge of the center section spar and fuselage dull for bonding from the edge forward about two inches. Lay up six plies of BID (RAEF) as shown, along the forward edges of the cowl. Use 45° fiber orientation. Add 3 extra 1.5" square pads to reinforce the flange where the screws are installed (eight places, see next page).

Flip your airplane upside down and repeat the flange layup on the bottom side. Don't panic when the prop flange moves up toward the top cowl. This is because of the sag of the rubber shock mounts with the engine upside down. Rest the airplane on the top longerons and stack weights up forward to balance the engine weight. This is no job for one or two people; it helps to have many hands, most of them toward the rear. It helps to have the prop installed to use as a lifting point.

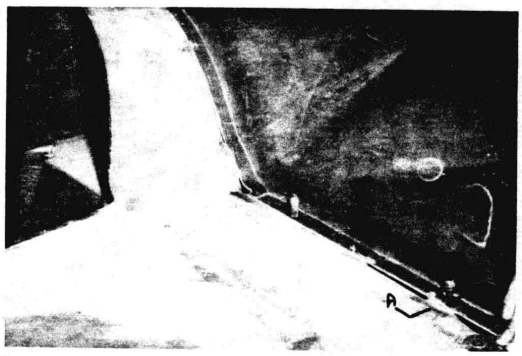

COWLING CLECOED IN POSITION ON LOCATING BLOCKS

From this point on, the top cowl half must be removed first and installed last. After the glass is cured, carefully pop the top cowl free of the mounting flange. Do not peel the flange up off of the spar or fuselage. The glass will not adhere to the tape but you may have to run a thin flexible knife blade under the flange glass to pop it free of the cowl (a cheap pairing knife is useful). Remove the top cowl and the bottomcowl. The mounting flange next gets a 2-ply BID tape inside along the

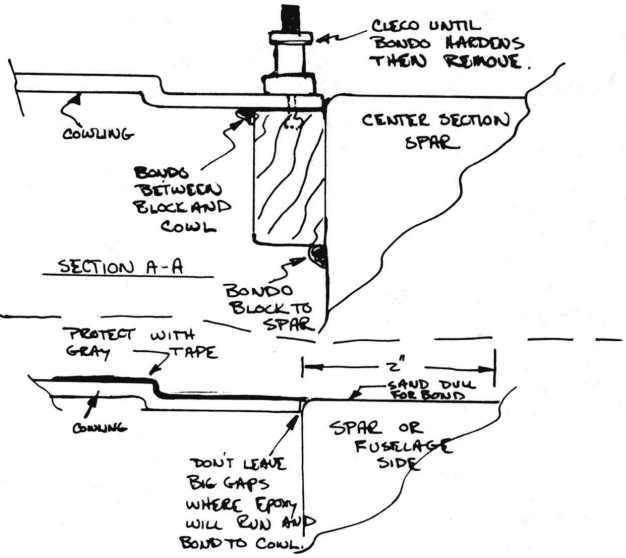

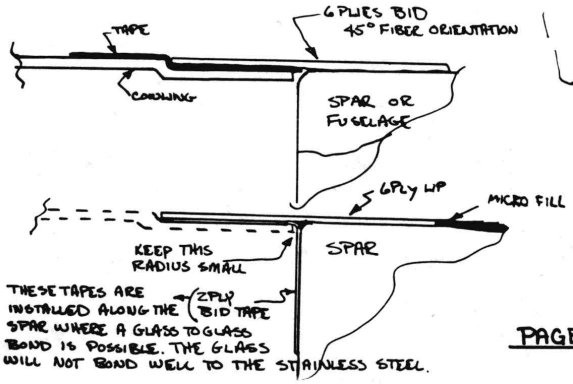

spar as shown. Of course you must sand the cured surfaces dull before the tapes are laid up. Turn your airplane right side up again and install #10 screws (507's) with countersunk washers (A3235-028-24A) and nutplates along the mounting flange. Camloks can be used in the forward flanges but assembly/removal is difficult since the cowl must drop down to clear the fasteners. The reason the cowl fits on the inside of the flange is that the cowl has higher pressure inside. If the flange were inside the pressure would tend to lift the cowl between fasteners, leaking air. Air leaks cause drag and result in cooling loss.

The fiberglass end ribs may be permanently installed on the bottom cowling by riveting and bonding with wet flox. Each rivet must have a small washer between the shop head and the fiberglass rib as shown in the sketch. A short 2ply BID tape as shown on page 36 is required at the lower edge of the mounting lip on each side. This little tape will help keep the mounting lip from peeling at the corners.

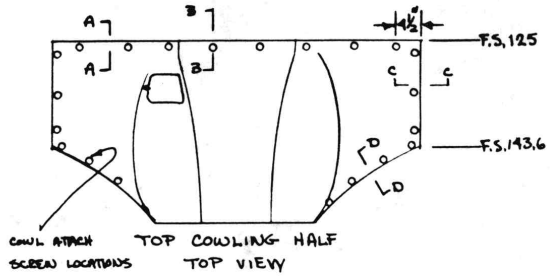

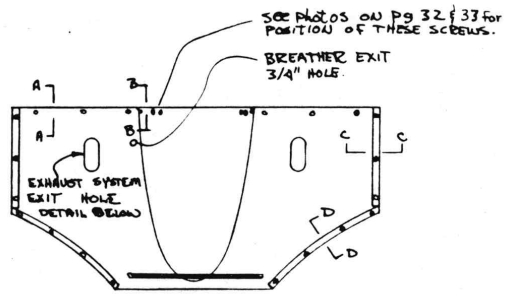

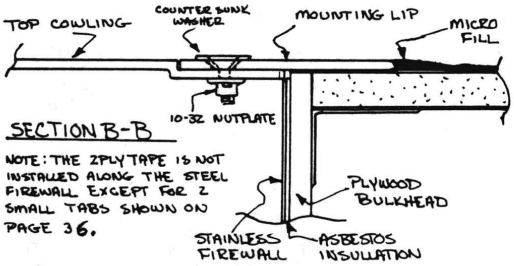

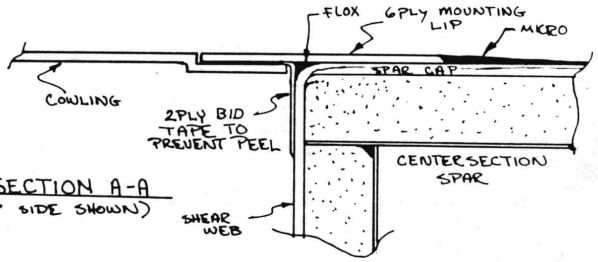

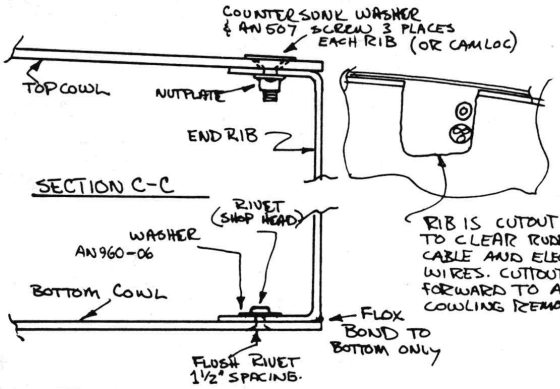

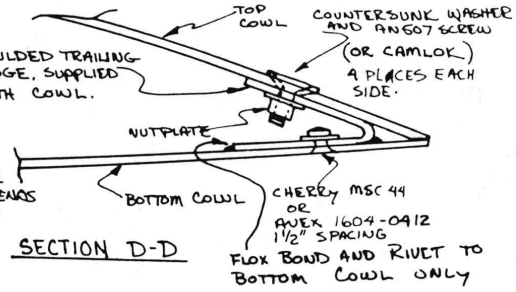

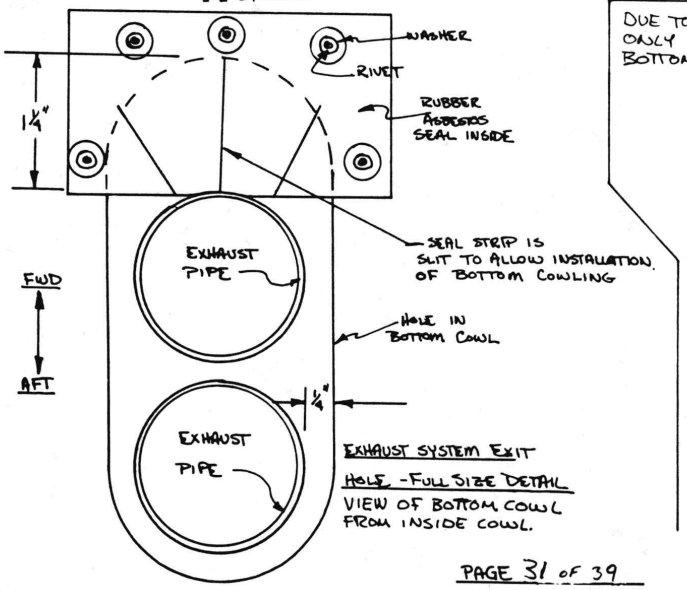

DUE TO THIER HIGH COST, CAMLOCS SHOULD ONLY BE USED IN THE TOP COWL. THE BOTTOM COWL IS NOT OFTEN REMOVED.

IF YOU SUBSTITUTE CAMLOC'S FOR THE AN507'S, USE THE FOLLOWING PART NO'S.

STUD
4002-6
or
4002-7

GROMMET
4002-0

RECEPTACLE
214-16N

The information on this page is for use by those builders wishing to fabricate their own cowlings. Use the air outlet dimensions shown below and position at the fuselage stations shown on the side view. The cowling can be made by packing urethane foam around the mounted engine, carving to shape (photos), glassing with five plies BID generally, local buildups to eight plies (total) at the mounting edges and around the door openings, and removing the foam after cure. This method is messy. The cowling for N7EZ was made this way.

THE BOTTOM COWL DOOR SHOWN IN THIS PHOTO HAS BEEN DELETED AND THE ATTACHMENT OF TOP AND BOTTOM COWL AT THE TRAILING EDGE HAS BEEN REVISED.

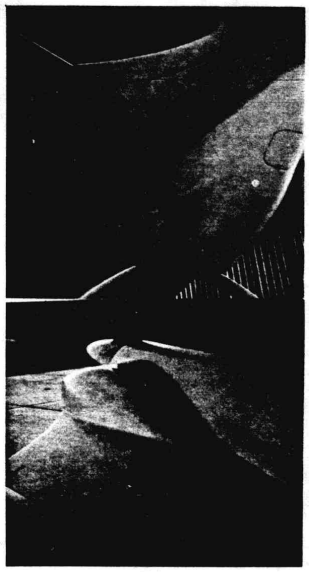

NOTE: THESE PHOTOS SHOW OLD-STYLE CONTINENTAL COWLING.

ARROWS SHOW POSITION OF ALL FASTENERS.

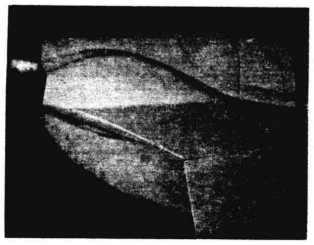

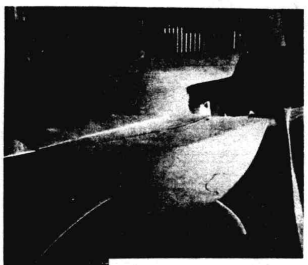

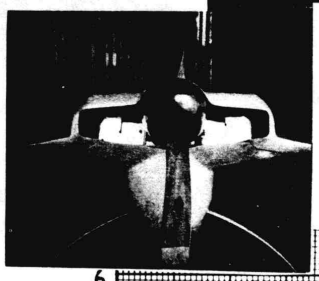

PROP EXTENSION IS 3 INCHES LONG.

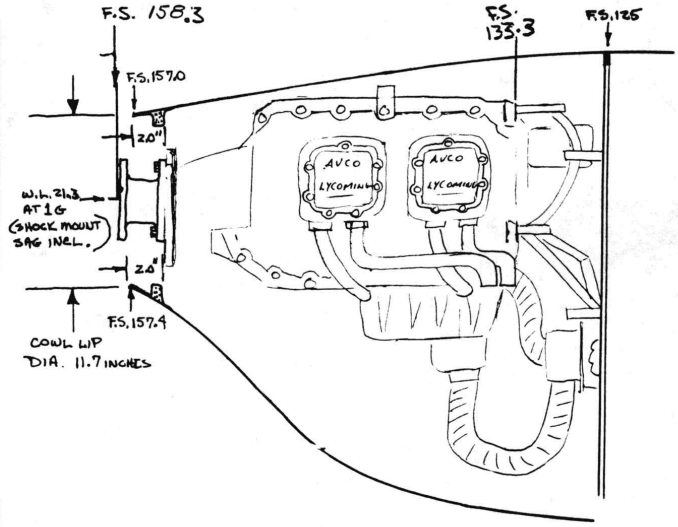

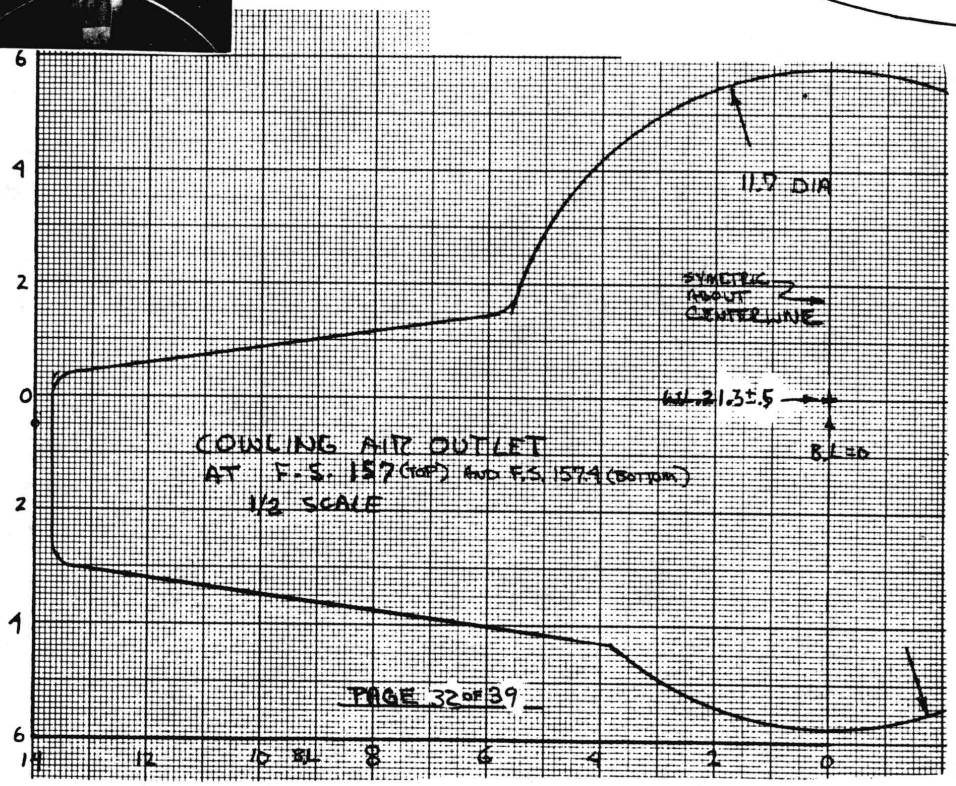

Inlet Lip

The cowling as supplied has no inlet lip BUT AN INLET LIP IS AVAILABLE FROM JIRAN.

IF DESIRED, make the inlet up, cut urethane foam strips as shown and glue in position with 5MIN or RAEF. Shape the lip as shown for your type engine. Sand the whole area as shown and lay up ~~THREE~~ plies BID over the foam lapping onto thecowl inside and outside.

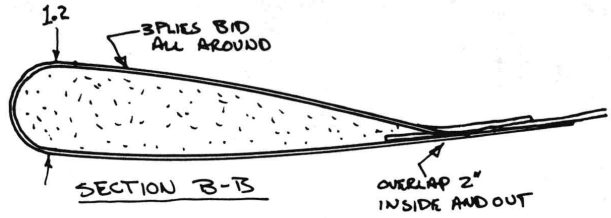

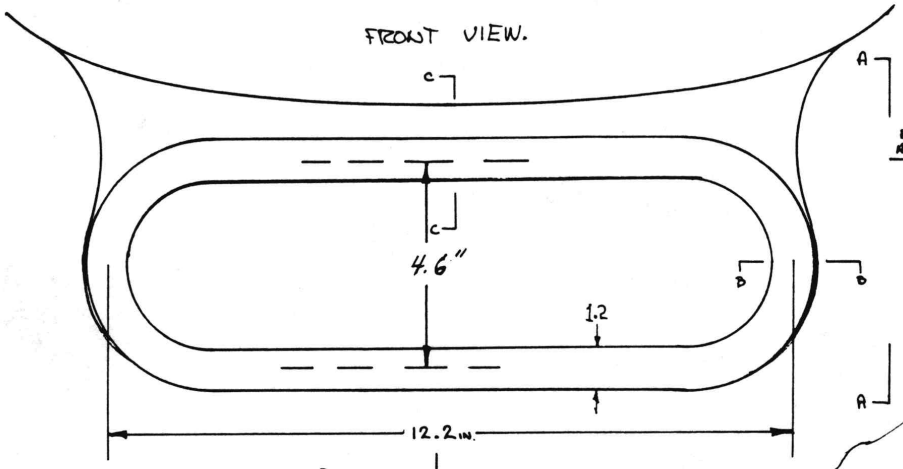

ENGINE HORSEPOWER	DIMENSION A
108	4.6

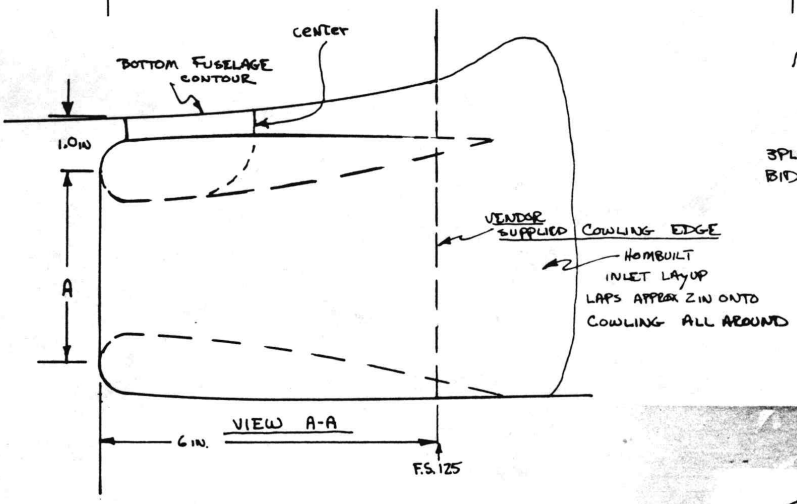

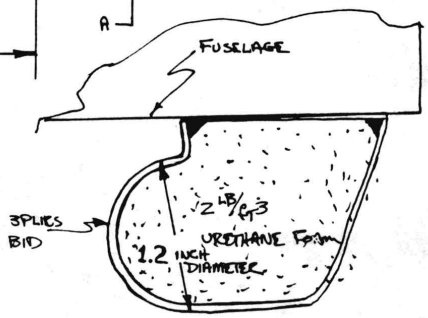

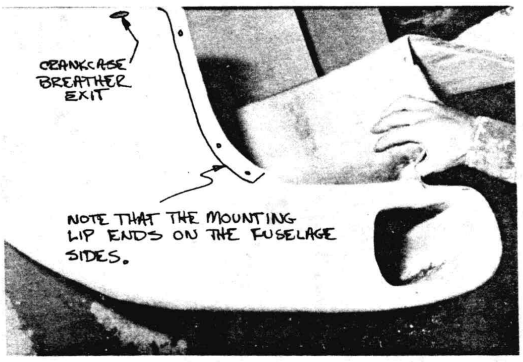

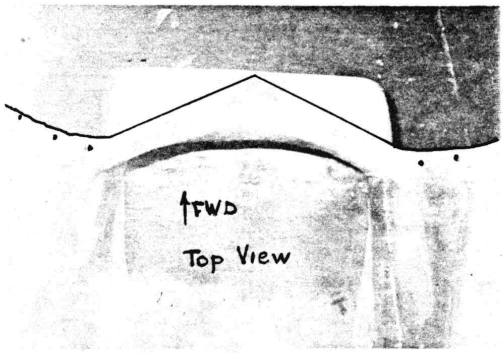

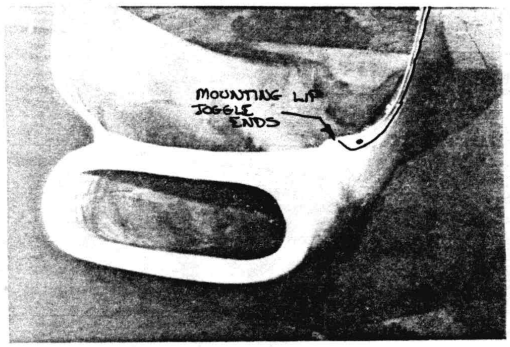

DETAIL PHOTOS OF THE PROTOTYPE COWLING INLET ON N4EZ

Step 17
Cowl Doors

We recommend only one cowling door, the one with the recess provided in the supplied cowlings. This door allows you to check the oil quantity, add oil, and inspect a limited area including accessories and the left exhaust system. If you're sure you are going to be removing your wings on a regular basis you may add doors over the rudder cable quick-disconnects to allow unhooking controls without cowl removal.

Note that the supplied cowling is reinforced around the area for the oil check door. If you want to install doors over the rudder disconnects, sand the inside and lay up four plies of BID the size of the door plus 1" all around. Let this layup fully cure before cutting out doors.

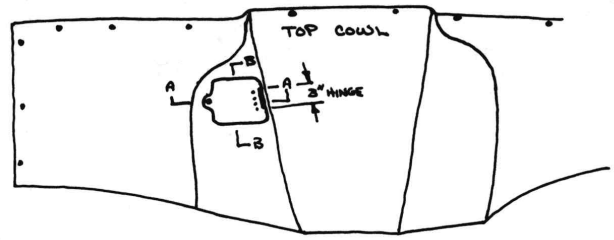

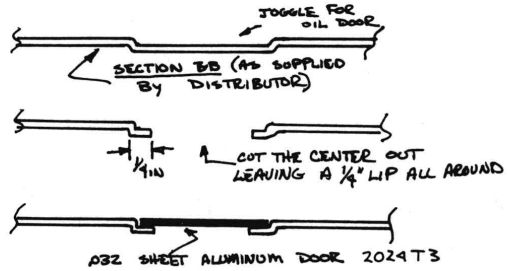

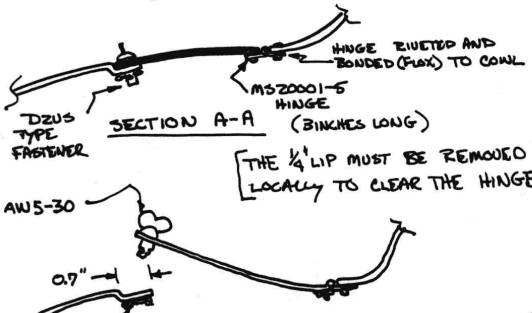

THE 1/4" LIP MUST BE REMOVED LOCALLY TO CLEAR THE HINGE.

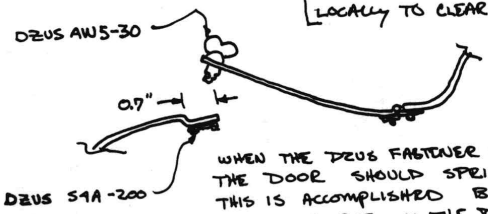

WHEN THE DZUS FASTENER IS UNLATCHED THE DOOR SHOULD SPRING OPEN. THIS IS ACCOMPLISHED BY FORMING A SLIGHT CURVE IN THE DOOR BEFORE INSTALLATION. THIS PRELOADS THE DOOR TIGHTLY AGAINST THE COWL LIP WHEN CLOSED AND KEEPS AIR FROM LEAKING OUT AROUND THE EDGES

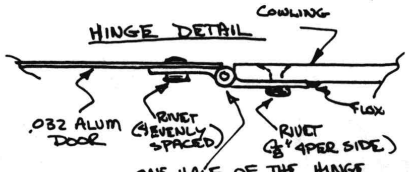

ONE HALF OF THE HINGE IS REVERSED TO MAKE UP THE DIFFERENCE IN THICKNESS OF THE COWL AND DOOR.

Step 17
Finishing Up

Install your prop, extension, and spinner. Follow the instructions supplied by the manufacturer.

Proper torquing of your prop bolts is very important. One method to use is as follows: tighten all of the prop bolts until the bolt heads just begin to apply pressure on the rear plate(everything up snug). The rear plate must be a minimum 5/16 thick 2024-T3 aluminum. Mark a zero reference position on each bolt head and on the rear plate next to it. Make a second mark 270° (3/4 turn) clockwise from the firstmark. Progressively tighten the bolts to the second mark giving each 3/4 of a turn in the process. This proceedure is simple and will give the correct torque, however determining the snug position can be difficult if you have tight bolt holes in your prop or a tight centering hole. If you are in doubt about using this technique, use a torque wrench and tighten the bolts to 180 inch-pounds.

It is wise to check propeller bolt torque periodically, especially during periods of changing humidity, to ensure that it has not decreased. Before each flight inspect the prop for signs of discoloration due to friction (char). Keep it tight and a wooden propeller is a safe reliable part of your airplane.

The propeller should be positioned vertically for removal of the top cowl. Position the prop horizontally for bottom cowl removal.

Install your cowling one half at a time and measure the distances from the aluminum baffles to the cowl for fit-up of therubber asbestos seal strips that you see in all of the photos. Install this stripping on the forward and aft baffles as you see in the photos and accompanying sketches (step 13). After you have the principal seal strips in position look for any areas which might allow cooling air to escape without doing its share of engine cooling. Close off any leaks with additional rubber asbestos gap seal strips as required.

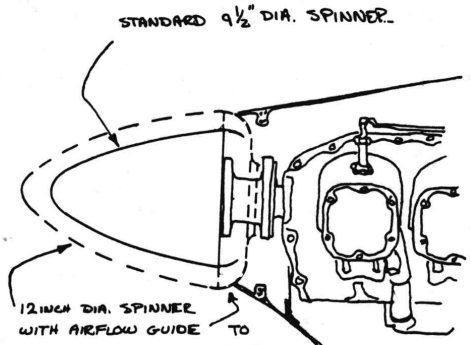

12 INCH DIA. SPINNER WITH AIRFLOW GUIDE TO STREAMLINE OUTLET AIRFLOW. AIRGUIDE IS DESIGNED TO INCREASE PERFORMANCE BY REMOVING THE TURBULENT COOLING AIRFLOW CAUSED BY THE SHARP LIP OF A STANDARD SPINNER. THE COWLING LIP MAY NEED TO BE TRIMMED TO CLEAR THE AIRFLOW GUIDE.

ANY SPINNER FROM 9 1/2" MINIMUM TO 12" MAXIMUM MAY BE USED.

NOTE: THE BEST SPINNER IS THE 10-3-INCH ONE WITH AIRFLOW GUIDE AVAILABLE FROM AIRCRAFT SPRUCE.

IMPORTANT! TO ELIMINATE LEAKS.

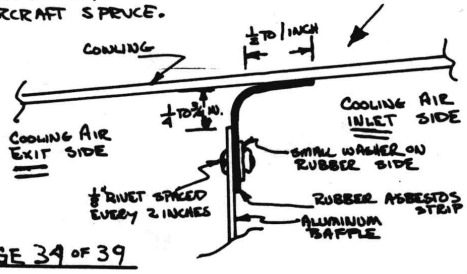

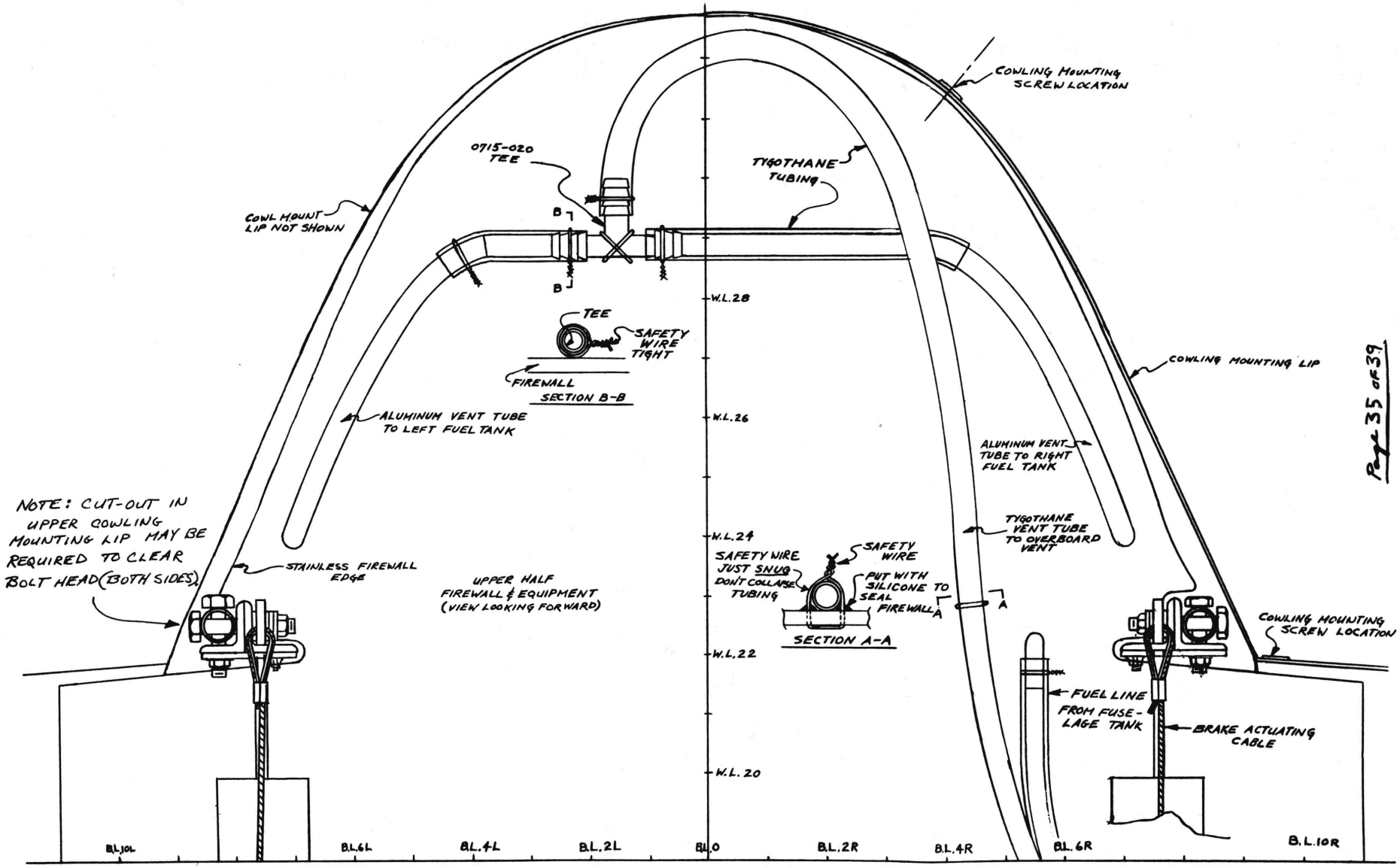
COWLING MOUNTING SCREW LOCATION
0715-020 TEE
TYGOTHANE TUBING
COWL MOUNT LIP NOT SHOWN
B
B
W.L.28
TEE
SAFETY WIRE TIGHT
FIREWALL
SECTION B-B
COWLING MOUNTING LIP
ALUMINUM VENT TUBE TO LEFT FUEL TANK
W.L.26
ALUMINUM VENT TUBE TO RIGHT FUEL TANK
NOTE: CUT-OUT IN UPPER COWLING MOUNTING LIP MAY BE REQUIRED TO CLEAR BOLT HEAD (BOTH SIDES)
W.L.24
TYGOTHANE VENT TUBE TO OVERBOARD VENT
SAFETY WIRE
SAFETY WIRE JUST SNUG DONT COLLAPSE TUBING
PUT WITH SILICONE TO SEAL FIREWALL
A
A
STAINLESS FIREWALL EDGE
UPPER HALF FIREWALL & EQUIPMENT (VIEW LOOKING FORWARD)
SECTION A-A
COWLING MOUNTING SCREW LOCATION
W.L.22
FUEL LINE FROM FUSE-LAGE TANK
BRAKE ACTUATING CABLE
W.L.20
B.L.10L
B.L.6L
B.L.4L
B.L.2L
B.L.0
B.L.2R
B.L.4R
B.L.6R
B.L.10R

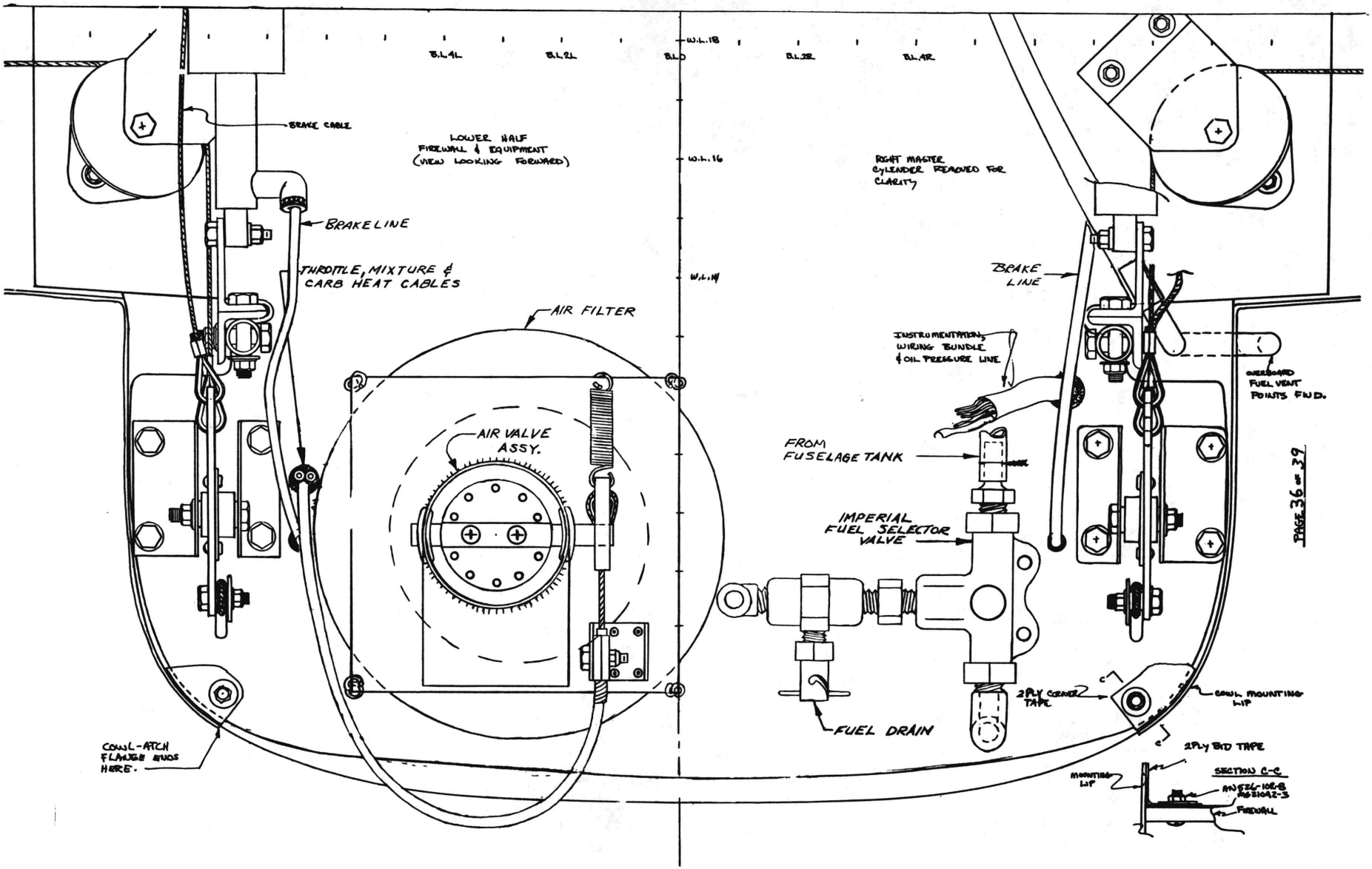
B.L.4L
B.L.2L
B.L.0
B.L.2R
B.L.4R
W.L.18
W.L.16
W.L.14
BRAKE CABLE
LOWER HALF
FIREWALL & EQUIPMENT
(VIEW LOOKING FORWARD)
RIGHT MASTER
CYLINDER REMOVED FOR
CLARITY
BRAKE LINE
THROTTLE, MIXTURE &
CARB HEAT CABLES
AIR FILTER
BRAKE
LINE
INSTRUMENTATION,
WIRING BUNDLE
& OIL PRESSURE LINE
OVERBOARD
FUEL VENT
POINTS FWD.
AIR VALVE
ASSY.
FROM
FUSELAGE TANK
IMPERIAL
FUEL SELECTOR
VALVE
2PLY CORNER
TAPE
COWL MOUNTING
LIP
FUEL DRAIN
COWL-ATCH
FLANGE ENDS
HERE.
2PLY BID TAPE
SECTION C-C
MOUNTING
LIP
AN525-10R8
MS21042-3
FIREWALL

Modification of the Canard

Since the VariEze has two widely separated lifting wings, the allowable CG range can be shifted by shortening or lengthening the canard. Thus a "tail-heavy" airplane can be made to fly "nose-heavy" merely by sawing off canard span, making no actual change to CG! This can be done only up to a point where directional stability is lost as the CG is moved aft. The flying qualities have been tested and it is confirmed that the canard/elevator is free from flutter at two canard spans- 150" as shown in the plans and 142" which is obtained by sawing 4" off each tip. If 4" is sawed off each canard tip, (142" span) you can move the allowable CG range aft 1.2". This is equivalent to adding 15-lb. weight to the nose at F.S.5.

In summary, the canard trim to 142" span lowers the allowable pilot weights about 30lb. If the airplane were originally designed for the O-200 with alternator, the canard would have been 142" span. Do not trim the canard to less than 142" in hopes of using further aft CG (aft of 102.2) to balance a heavy Lycoming and a light pilot. Directional stability may degrade aft of 102.2 and the canard has not been tested at less span.

If you know you are going to use an O-200 or a Lycoming O-235 and your weight is less than 180lb, go ahead and trim it now, before your paint job. Same goes for even the A75 engine if your weight is less than 150lb.

The canard can be trimmed easily without much disruption of the paint job. Refer to the sketch. Using a hack saw or coping saw, saw off 4" from the tip of each elevator. Now saw a 4-inch section from the canard as shown so the tip can be glued back on (wet micro) and no recontouring of the tip will be needed.

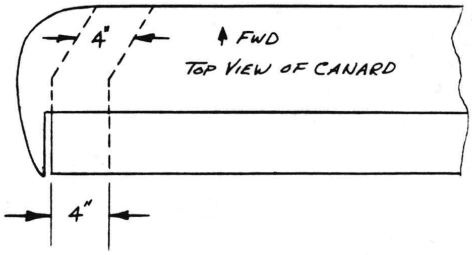

CG RANGES

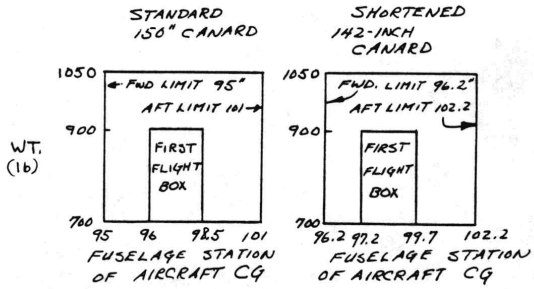

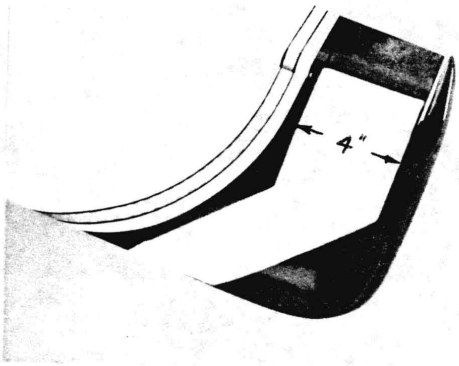

← VIEW SHOWING SECTION OF CANARD TO BE REMOVED.

CONVERSATION PIECE! →

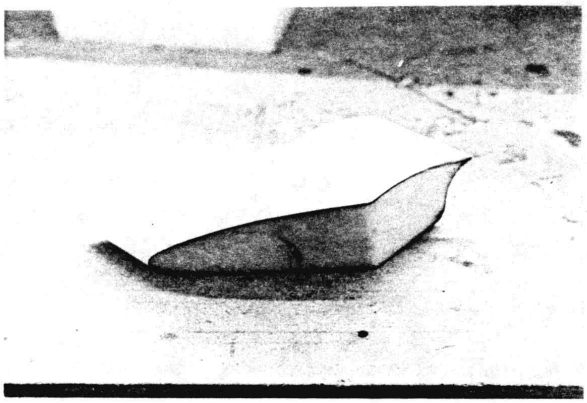

BILL OF MATERIALS

CHECK CURRENT CATALOGS FOR BROCK, AIRCRAFT SPRUCE & WICKS MATERIALS AVAILABILITY

The following materials are available from
Aircraft Spruce & Specialty (or) Wicks Aircraft Supply
PO Box 424 — 410 Pine St.
Fullerton, Ca. 92632 — Highland, Il 62249

Sheet Metal
- .063 2024-T3 alum, approx 6" x 12"
- .025 6061-T6 approx 12 sq ft

Hardware

Bolts
- AN3-5A (14)
- AN3-6A (2)
- AN3-7A (2)
- AN3H-3A (3)
- AN4-6A (2)
- AN4-12A (4)
- AN4-13A (2)
- AN4-15A (2)

Nuts
- AN364-832 (3)
- MS21042-3 (15)
- MS21042-4 (14)

Washers
- AN960-416 (20)
- AN960-06 (100)
- AN970-3 (2)

Rivets
- Avex 1601-0410 (120)
- Avex 1604-0412 (60)
- or
- Cherry MSP 43 (120)
- Cherry MSC 43 (60)

Screws
- AN525-832-12 (3)

Misc
- Gascolator
- 2½" dia worm clamp (4)
- MS20001-5 hinge (3 inches)
- 2½" CAT-10 black hose (30")
- 2½" SCAT-10 red hose (30")
- 18-1-C Nicopress sleeve (3)
- AN111-4 spool (1)
- AN100-3 thimble (4)
- Century Spring Corp C-161 (4)
- Rubber-asbestos firewall fabric 1/16" thick (3 FT^2)
- TY-525M TY-RAP straps (20)
- TY-528M TY-RAP straps (8)
- Alco switch MTF-106N (2)
- or
- Micro switch 8A1011 (2)
- RC10-14 solderless terminals (2)
- 18-gauge non-shielded airframe elct. wire (30')
- Weatherhead 6749 valve
- 4 ft Tygothane 0505-165 5/8 ID (breather)
- 2 ea MS21919 DG12 clamps
- 1 ft 3/8 OD 3003-0 alum tube
- 2 ft Aeroquip 303-6 & -14 fire sleeve
- 2 ea Aeroquip 491-6 fittings
- 2 ea AN822-6D, AN819-6D, AN818-6D
- 15 ft Tygothane 0507-107 3/8 ID ½ OD

The following prefab items are avilable from
Ken Brock Manufacturing, 11852 Western Ave,
STANTON CA. 90680

Fuel system including:
- 4 ft Tygothane 0505-165 5/8 ID-7/8 OD
- 15 ft Tygothane 0505-107 3/8 ID-½ OD
- 2 ea 0716-202 polyurethane tee
- 2 ea 0711-162 polyurethane elbow
- 6 ea ½" worm clamps
- ea AN822-6D, AN819-6D & AN818-6D
- FT-18 fuel cap
- Weatherhead 6749 valve

Exhaust System
- 4 gaskets
- 8 brass nuts 5/16 x 24

Engine Mount
- 4130 weldment

Spacer Kit Including
- 1 ea ½ OD x 5/16 ID x ½ L alum
- 1 ea ¼ OD x 3/16 ID x ¼ L steel
- 1 ea 5/16 OD x 3/16 ID x ¼ L steel

Throttle Quadrant Including
- Throttle, mixture & carb heat levers, cables & housings

Carb Heat Valve Assembly

Carb Heat Muff Assembly

The fiberglass cowling, complete with end ribs are available from Fred Jiran, Bldg 6, Mojave Airport, Mojave, Ca. 93501.

CAUTION

Make the corrections shown on page 39 before starting construction. These plans must be updated with any corrections occurring after newsletter 19.

NOTE: Items included with Brock prefab parts are not listed. Optional items (i.e. instruments, camlocs vs. AN507 screws for cowling) are not listed.

ADDENDUM

MAKE THE FOLLOWING CORRECTIONS TO THIS BOOK BEFORE STARTING CONSTRUCTION!

Page 4	Magneto wiring should be #18 wire.
Page 13	Drill a 1/4" hole in the low point of the air inlet hose to drain fuel for a flooded start. (Low point with gear retracted).
Page 27	Add "mixture & throttle controls must operate smoothly without free play, lag or excess friction. They must snub against idle & full positions. Check this before running the engine.
Page 31	CAMLOC sizes may vary depending on fit of COWL. The 4002-6 studs may be to short in some areas (4002-7 or 4002-8 may be required).